VICTOR TAICHUNG

Management System
ISO 9001:2015
ISO 14001:2015
ISO 45001:2018
www.tuv.com
ID 0091003197

Art of Precision & Performance

Vturn-NP16/NP20

New & Narrow Lathe with High Performance

- Machine width 1.5/1.93 meters (NP16/NP20)
- Turning length 250/400 mm (NP16/NP20)
- Rapid feeds 30/30 m/min
- Roller guideways
- Servo turret
- One-piece slant bed
- Rear / Right chip disposal
- Ready for unmanned operation

Victor Taichung – an established ISO 9001, 14001 & 45001 company

Pursuit of Productivity

New & Narrow Lathe NP16/NP20

- Machine width only 1488 mm / 1930 mm
- Z-travel 250 mm / 400 mm
- High rapid feed 30 m/min
- 6" / 8" power chuck
- Rear chip disposal
- Spindle thermal displacement is estimated and compensated by Victor's own PLC.

Victor Taichung's own spindle

- NP16: Spindle output 11 kW (S3-15%)

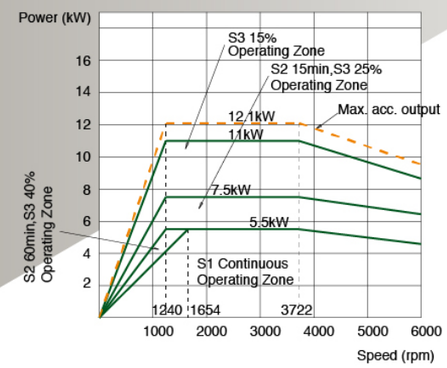

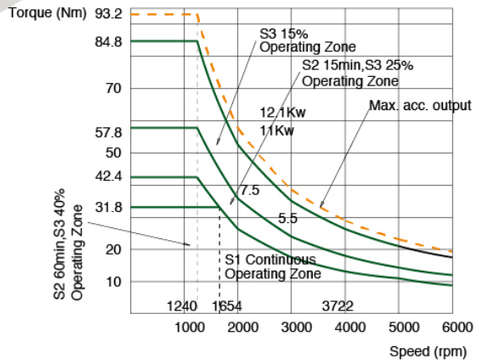

- NP20: Spindle output 15 kW (S3-15%)

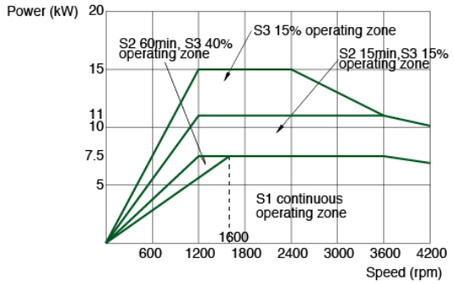

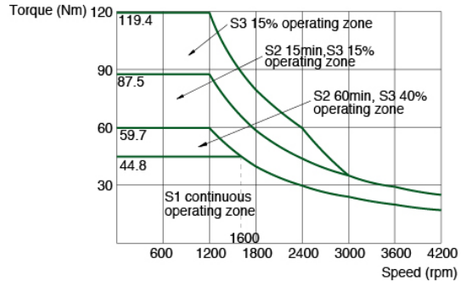

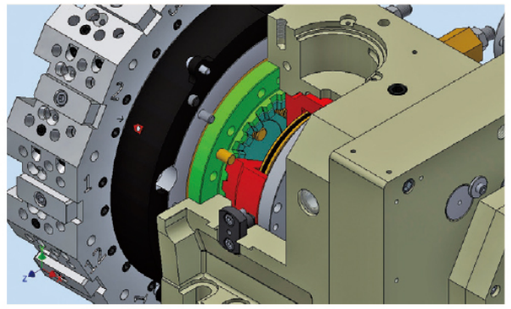

Servo driven Turret

- 3-piece coupling design without turret disk up/down affords high pressure coolants without leakage during indexing.
- Turret indexing time 0.9 (T-T, opposite).
- C-axis option is available with BMT milling turret.

MEEHANITE

Certificated Casting

GA350

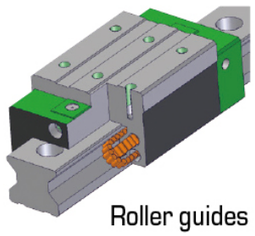

Roller guides

35 mm (X/Z)

Strong structure

- One piece slant bed
- High rapid feeds 30/30 m/min
- Roller type guideways
- Meehanite casting

Standard Accessories

Fanuc 0i-TF Plus (10.4") control + Manual Guide I (MGI)

- **Right side for easy operation**
- **Manual Guide I for easy programming**
- **Inverter type hydraulic tank reduces the temperature rise**

Coolants & chips disposal

- Coolant flush on Z-axis covers.
- Cliff design minimizes chip built-up.
- Rear disposal chip conveyor minimizes machine width.

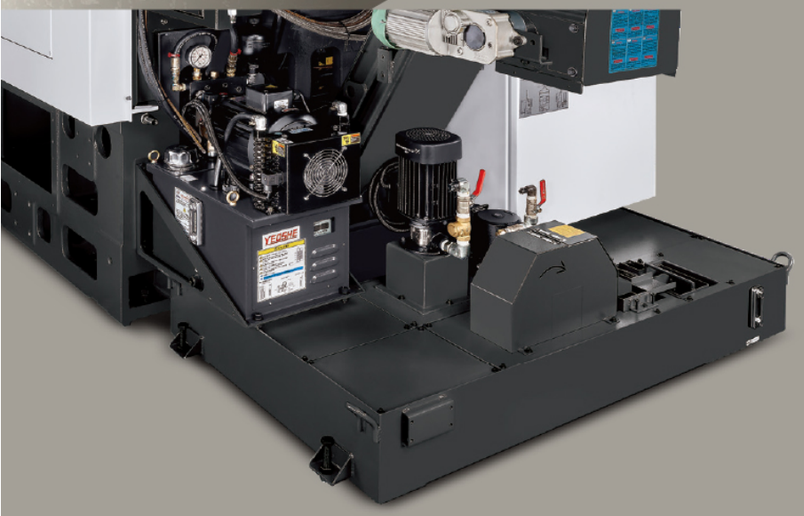

Oil skimmer (opt.)

Fanuc 0i-TF Plus (10.4")

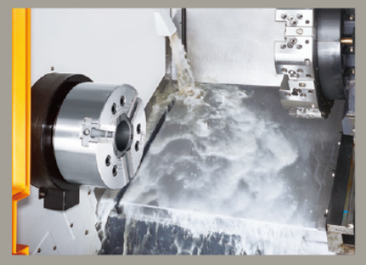

Coolant flush onto covers
(Photo with opt. pump Grundos MTH4-40/4)

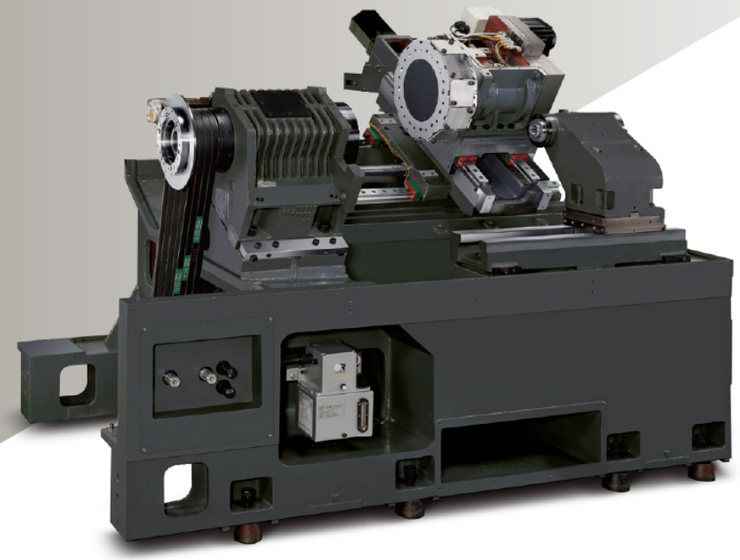

C-axis Turn Mill (opt.)

- Belt-driven spindle with magnetic speed sensor as position coder to ensure accuracy 0.01°.
- Milling motor by servo motor with spindle control (G96.4) for easy programming with Manual Guide I.
- Milling turret by BMT (bolt mounted tooling) for high static rigidity.
- Milling speed 4000 rpm (opt. 6000 rpm with oil mist lubrication).

Milling Motor Output (2.2 kW)

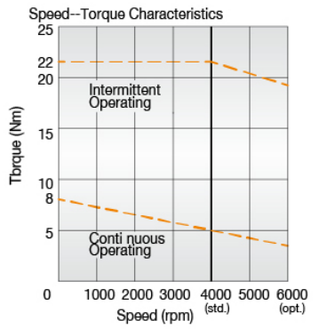

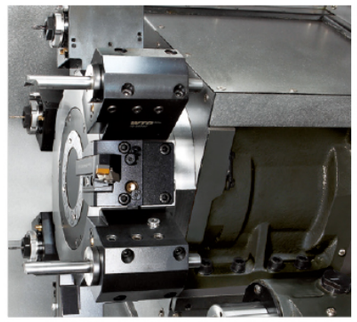

Manual MT#3 tailstock
(opt.)

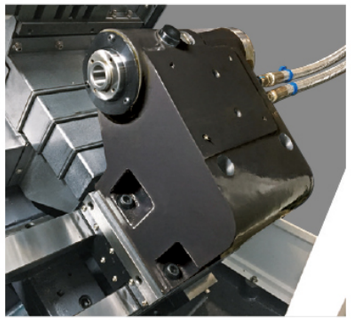

Tool Presetter & Part catcher
(opt.)

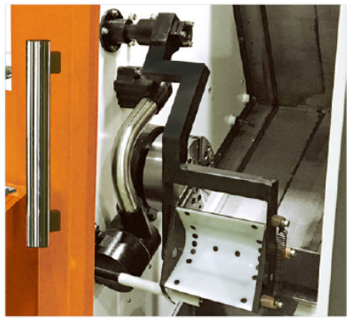

Oil skimmer
(opt.)

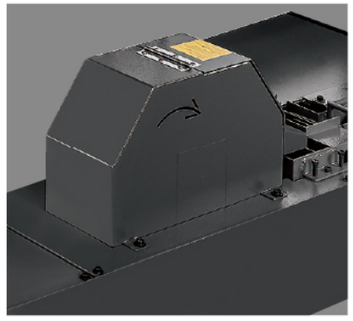

Built for Unmanned Operation

Built in articulated robot EWR-03

- Maximum part weight: 3 kg
- Maximum part size: Ø120 x L.100 mm
- Part loading/unloading time along chuck: 7 seconds.
- Slant-pallet work feeder for easy orientation and high flexibility.

Robot with grippers

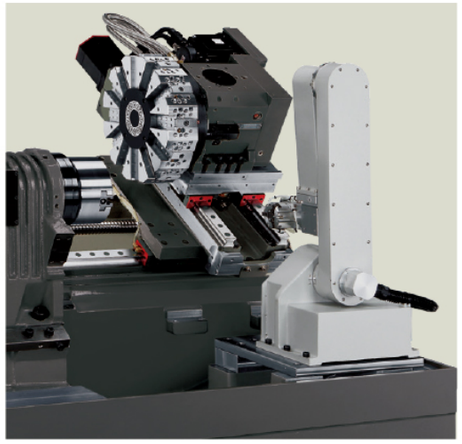

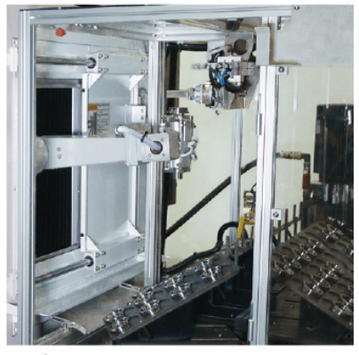

Work feeder (multiple pallets) and Turnover station

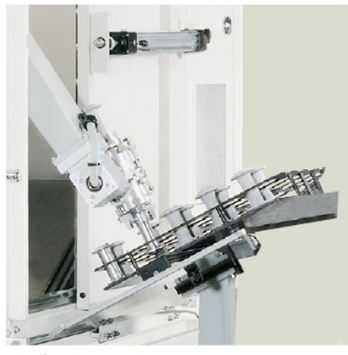

Work feeder (single pallet)

Work feeder (vibrator)

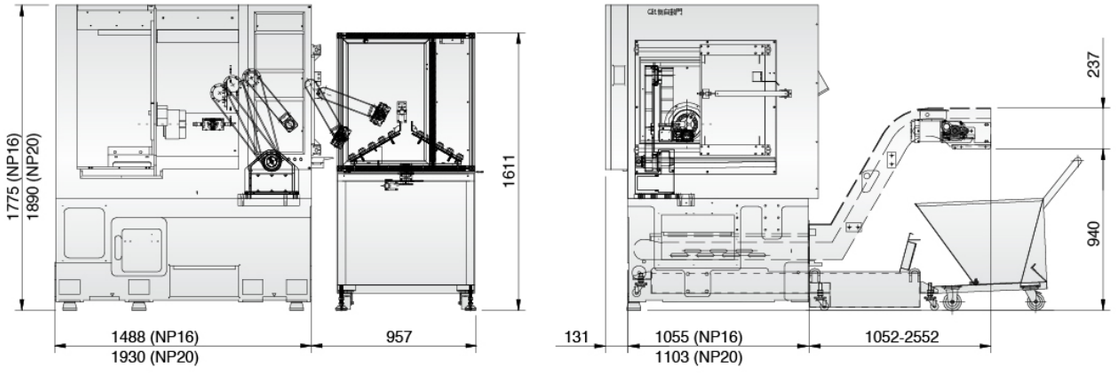

Gantry Robot

- Mounted on machine base composes a compact cell
- Heavier parts (> 3 kg) can be loaded
- Part changeover time: 15 seconds (including door open/close time)
- One robot can take care two lathes.
- Measuring station can be integrated for on-line inspection.

Work feeder (piled up type)

Work feeder (flexible)

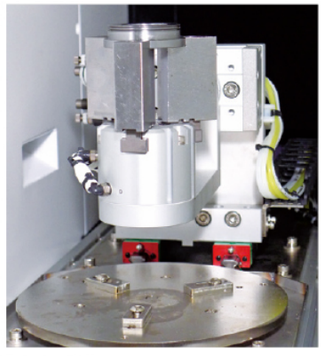

Turnover station

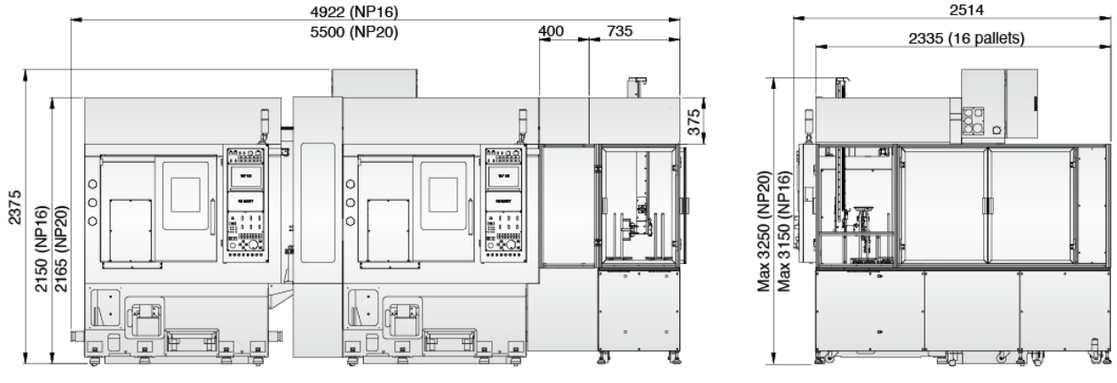

Interference Chart / Operating Range

Vturn-NP16

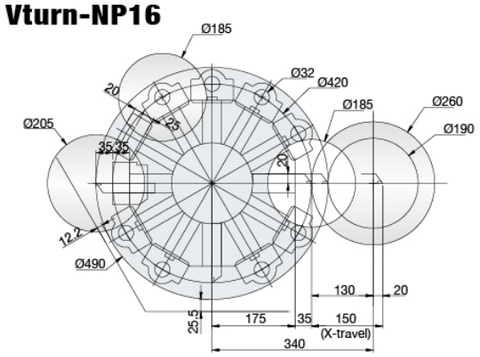

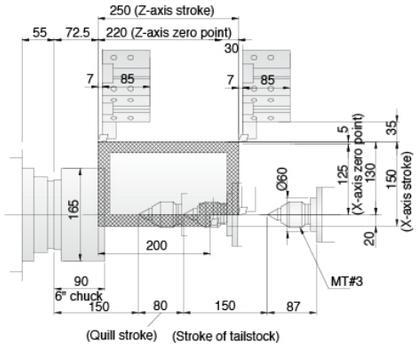

Vturn-NP16CM

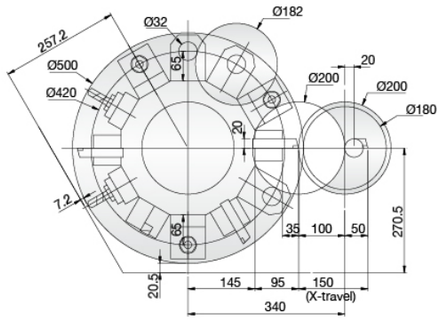

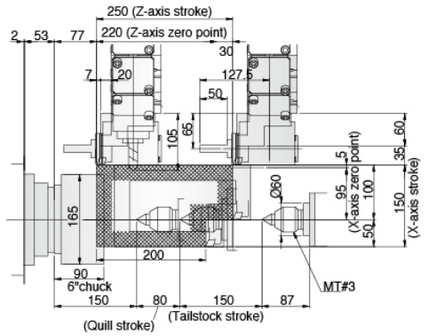

Vturn-NP20

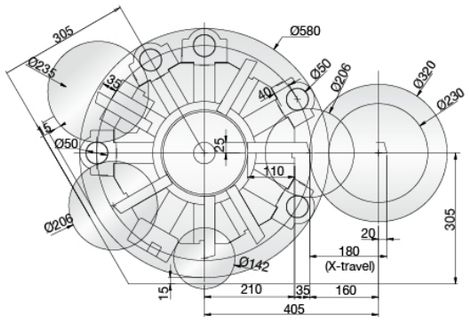

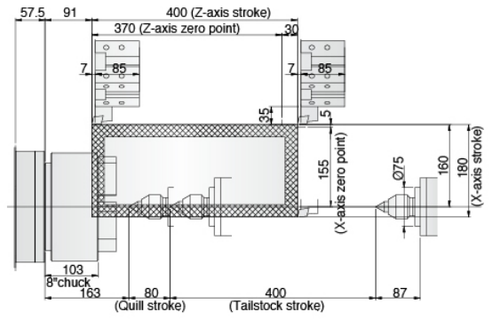

Vturn-NP20CM

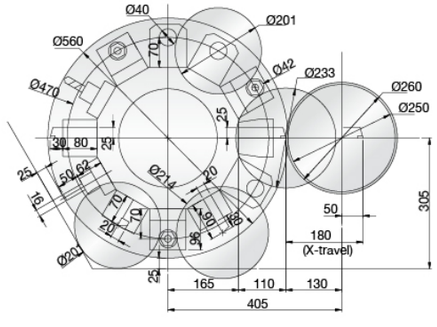

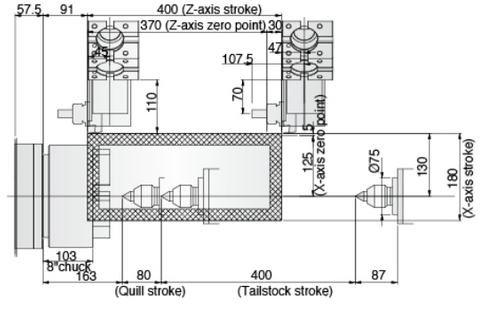

Machine Layout

Vturn-NP16

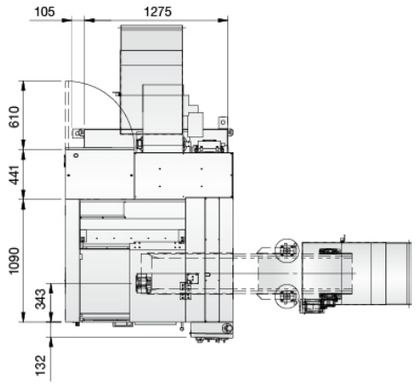

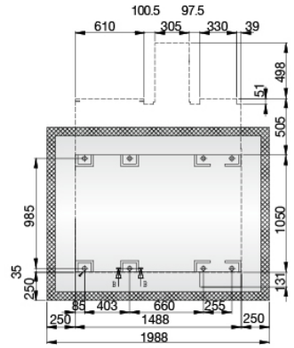

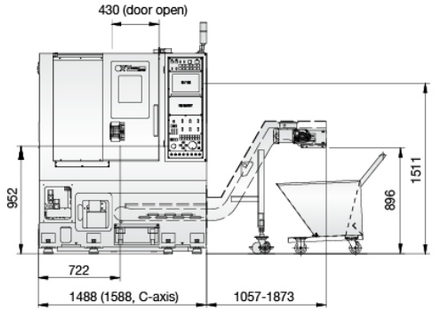

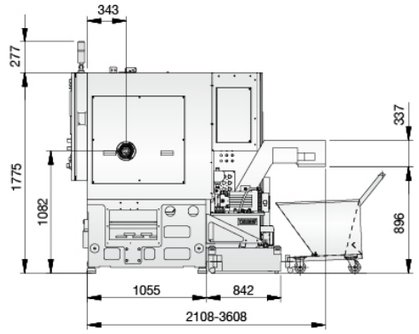

Vturn-NP20

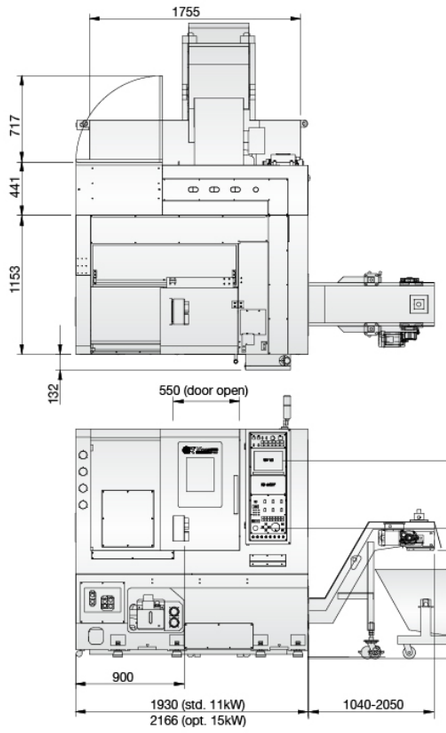

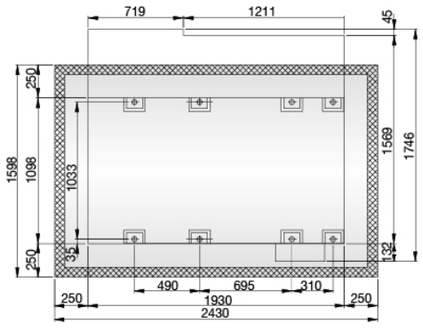

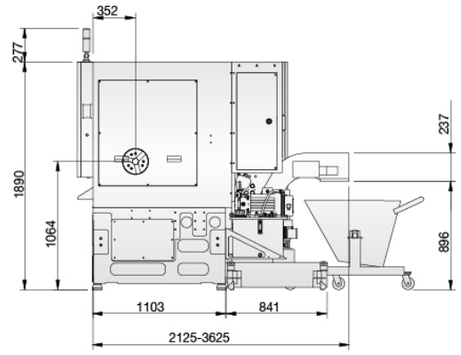

Tooling accessories (Excl. BMT Turret)

TOOLS \ MODEL	Vturn-NP16	Vturn-NP20
Tool shank for turret disk	20 mm (3/4")	25 mm (1")
Maximum boring bar Dia.	32 mm (1 1/4")	50 mm (2")
Face + OD cutting tool holder	2	1
Face + ID. cutting tool holder	1	1
Boring bar holder		
32 mm (1 1/4")	7	-
40 mm (1 1/2")	-	7
50 mm (2")	-	1
Boring bar sleeve		
8 mm (5/16")	1	1
10 mm (3/8")	2	2
12 mm (1/2")	2	2
16 mm (5/8")	2	2
20 mm (3/4")	2	2
25 mm (1")	2	2
32 mm (1 1/4")	-	2
Drill socket		
MT1	Opt.	Opt.
MT2	1	1
MT3	Opt.	1
MT4	-	1
U drill socket		
20 mm (3/4")	1	Opt.
25 mm (1")	1	1
32 mm (1 1/4")	-	1

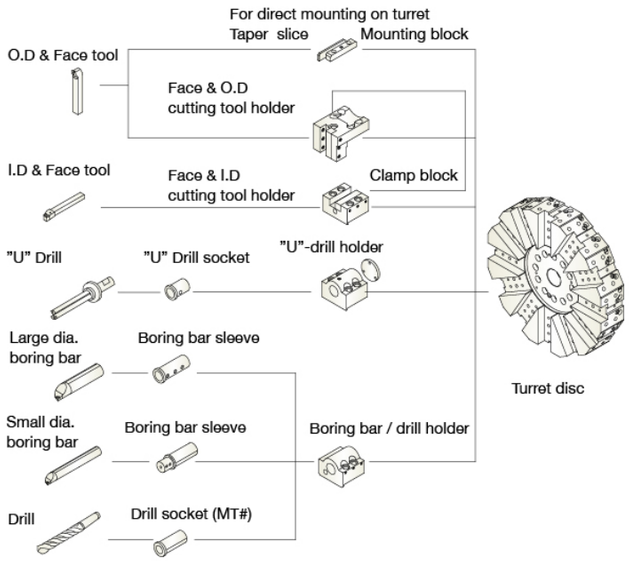

C-axis Application

Vturn-NP16CM/NP20CM with BMT-45/55 Milling Turret (Opt.)

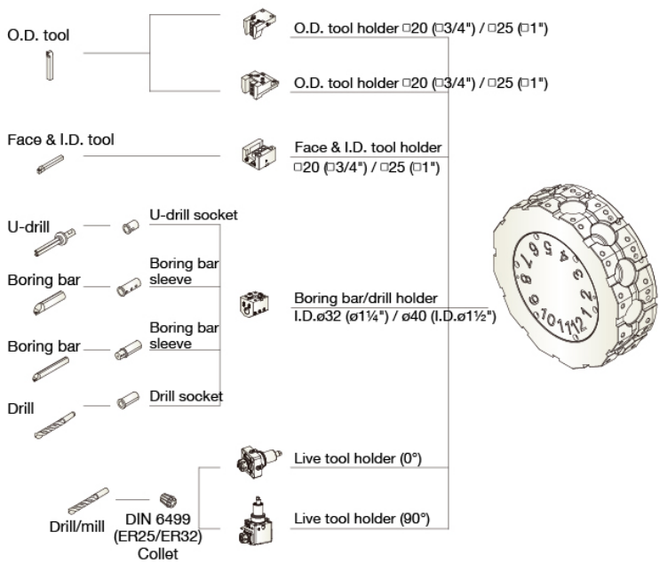

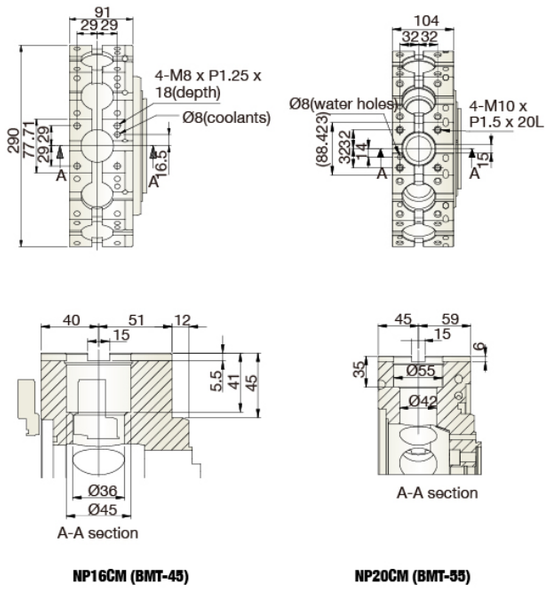

NP16CM (BMT-45)

NP20CM (BMT-55)

VICTOR Taichung's FANUC 0i-TF Plus 10.4" Control (Type I) Specifications

Standard

ITEM\SPECIFICATION		DESCRIPTION
Controlled Axes		
1.	Controlled axes	2 Axes (X, Z)
2.	Simultaneous controlled axes	2 Axes
3.	Least input increment	0.001mm
4.	Least command increment	0.0005mm (X) / 0.001mm (Z)
5.	Command system	Incremental / Absolute
6.	HRV Control	HRV3+
7.	Unexpected disturbance torque detection (AIR-BAG)	Std.
8.	Backlash compensation	Std.
9.	Stored pitch error compensation	Std.
10.	External data input (by ETDC: Estimating the Time Displacement for Compensation)	Std.
Operation & Program Input		
1.	Input / Output interface	RS-232, PCMCIA Card, USB
2.	Tool offset	99 sets
3.	Sequence number	N5-digit
4.	Program number	O8-digit
5.	Program name	31-characters
6.	M code function	M3-digit
7.	S code function	S4-digit
8.	T code function	T4-digit
9.	Positioning	G00
10.	Linear interpolation	G01
11.	Circular interpolation	G02, G03
12.	Programmable data input	G10
13.	Plane selection	G17~G19
14.	Inch / Metric conversion	G20 / G21
15.	Reference position return	G28, G30
16.	Thread cutting	G32, G34
17.	Threading retract	Std.
18.	Tool nose radius compensation	G40~G42
19.	Work piece coordinate system	G52~G59
20.	Macro, Sub program call	G65, M98, M99 (10 folds nested)
21.	Multiple repetitive cycle I & II	G70~G76
22.	Canned cycle for drilling	G80~G89
23.	Canned cycles	G90, G92, G94
24.	Program stop / end	M00~M02 / M30
25.	Rigid tapping (Spindle)	M29
26.	Manual Guide I	Std.
27.	Optional blocks skip 2-9	Std.

Feed Function		
1.	Manual handle feed rate	X1, X10, X100
2.	Rapid traverse rate	F0, 25%, 50%, 100%
3.	Cutting feed rate	0~150%
4.	Spindle override	50~120%
5.	Feed er Minute / Revolution	G98 / G99
Edit Operation		
1.	Part Program Storage Length (in total)	5120m / 2MB
2.	Number of Registerable programs (in total)	1000
3.	Part Program Editing	Std.
C Axis Function		
1.	Polar coordinate interpolation	G112, G113
2.	Cylindrical interpolation	G107
3.	CS contouring control	Std.
4.	Spindle control with servo motor	G96.4
5.	Coordinate System Rotation	Std.

OPTIONS

With hardware Included		0i-TF Plus
1.	Tool life management	□
2.	Program restart	□
3.	Data server (with PCB and CF card 1GB)	□
4.	Ethernet/IP (to be linked to robot)	□
5.	PROFIBUS-DP (to be linked to robot)	□
6.	ProfiNet (to be linked to robot)	□
7.	Fast Ethernet (required for SCADA Web with additional RJ45 port)	□
Without hardware Included		
8.	Circular thread cutting (G35,G36)	□
9.	AICC-1 (G5.1 Q1, 40 blocks)	□
10.	AICC-2 (G5.1 Q1, 200 blocks)	□
11.	Helical interpolation (C-axis only)	□
12.	Arbitrary speed threading	□
13.	Memory card program entry count extension (Max. 1000)	□

NP20 Bigger Spindle Output

(18.5 kW, S3-15%, optional)

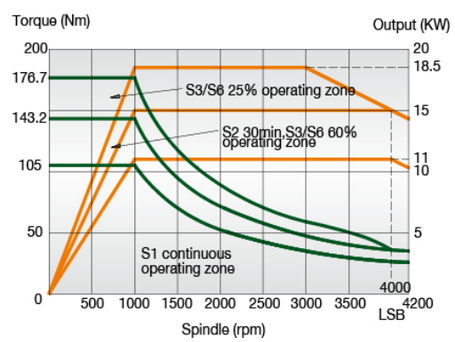

Machine Color Option

Standard

RAL-7024

Machine Specifications

Item	Unit	Vturn-NP16 (CM)	Vturn-NP20 (CM)
Capacity			
Swing over bed dia.	mm	Ø570	Ø650
Standard turning dia.	mm	Ø185 (Ø200)	Ø206 (Ø234)
Maximum turning dia.	mm	Ø260 (Ø200)	Ø320 (Ø260)
Swing over carriage dia.	mm	Ø325	Ø365
Between centers	mm	270	520
Bar capacity (Hole thru draw bar)	mm	Ø42	Ø52 (opt. Ø42, Ø66 LSB)
Axis Feeds			
X axis travel	mm	20+130 (50+100)	20+160 (50+130)
Z axis travel	mm	250	400
Rapid feed - X / Z axis	m/min	30 / 30	30 / 30
Feed motor - X / Z axis	kW	1.8 / 1.8	1.8 / 1.8
JOG feed	mm/min	X/Z: 0~1260	X/Z: 0~1260
Ball screw dia. x pitch	mm	Ø25 x P10 (X) Ø40 x P10 (Z)	Ø25 x P10 (X) Ø40 x P10 (Z)
Guideway width - X / Z axis	mm	35 / 35	35 / 35
Spindle			
Spindle speed	rpm	6000	4200 (opt. 6000)
Spindle nose (chuck)	inch	A2-5 (6")	A2-6 (8"), opt. A2-5 (6")
Spindle motor power (cont./30min/25%)	kW	5.5 / 7.5 / 11	7.5 / 11 / 15 (opt. 11 / 15 / 18.5)
Spindle bearing inside dia.	mm	Ø80	Ø100
Spindle bore dia.	mm	Ø52	Ø62 (opt. Ø78 LSB)
Spindle taper		1/20	1/20
Turret			
No. of tools (live)		12 (12)	12 (12)
Tool shank size	mm	□20	□25 (opt. □20)
Max. boring bar dia.	mm	Ø32 (BMT-45)	Ø40 (BMT-55)
Exchange time (T-T)	sec	0.9 (opposite)	0.9 (opposite)
Milling speed	rpm	4000 (opt. 6000)	4000 (opt. 6000)
Milling motor	kW	2.2	2.2
Tailstock (Optional)			
Tailstock quill dia.	mm	Ø60	Ø75
Quill stroke	mm	80	80
Quill taper		M.T. #3	M.T. #4
Machine			
NC controller	Fanuc	0i-TF Plus (10.4")	0i-TF Plus (10.4")
Coolant tank capacity	L	160	240
Power requirement	kVA	14.4 (15.1)	16.6 (17.3)
Machine dimension L x W x H	mm	1488 (1588) x 2108 x 1775	1930 x 2125 x 1890
Net weight (incl. standard accessories)	kgs	3700 (4070)	4000 (4370)

* Machine and controller specifications are subject to change without notice.

Standard accessories:

- Fanuc 0i-TF Plus (10.4") with Manual Guide i
- Hydraulic chuck with soft jaws
- Chip conveyor (rear disposal)
- Fully enclosed splash guarding
- Tool holders (only for standard turret)
- Coolant flush on Z-axis cover
- 3 step warning light

Optional accessories:

- Manual tailstock with power quill
- Chip conveyor (right disposal)
- Manual tool presetter
- Auto tool presetter
- Parts catcher (swing type)
- KITAGAWA® power chuck
- Air conditioner for electrical cabinet (Panel cooler)
- Higher pressure coolants
- Bar feeder interface
- Air blow
- Oil skimmer
- Oil mist collector
- Hard jaws
- Tailstock center
- Auto door
- Small spindle bore (Ø42 mm, 6000 rpm)
- Large spindle bore (Ø66 mm, 4000 rpm)
- C-axis
- Robot system

VICTOR TAICHUNG profile:
Sales turnover: USD 156 mil's (in 2020)*
No. of employees: 796
*Exchange rate: 1 USD=28.5 TWD.

HTL VTL VMC HMC XMT PIM

THE VICTOR-TAICHUNG COMPANIES

TAIWAN
http://www.victortaichung.com
E-mail :info@mail.or.com.tw
□ Victor Taichung Machinery Works Co., Ltd.
No. 1, Jingke Central 2nd Rd.,
Nantun Dist., Taichung 40852,
TAIWAN, R.O.C.
TEL : 886-4-23592101
FAX : 886-4-23593389

FRANCE
□ Victor France
TEL : 33-1-64772000
FAX : 33-1-64772063

GERMANY
□ Victor GmbH
TEL : 49-2261-478434
FAX : 49-2261-478327

SOUTH AFRICA
□ Victor Fortune (PTY) Ltd.
TEL : 27-11-3923800
FAX : 27-11-3923899

MALAYSIA
□ Victor Machinery (M) SDN. BHD.
TEL : 60-3-56337180
FAX : 60-3-56337191

THAILAND
□ Victor (Thailand) Co. Ltd.
TEL : 66-2-9263735
FAX : 66-2-9032373

INDONESIA
□ PT. Victor Machinery Indonesia
TEL : +62-21-88958504
FAX : +62-21-88958513

USA
□ Fortune International Inc.
TEL : 1-732-2140700
FAX : 1-732-2140701

CHINA
□ Victor Taichung
Machinery (Shanghai)
TEL : 86-21-59768018
FAX : 86-21-59768009

VICTOR TAICHUNG was also marketed under the brand names VICTOR (outside North America) and FORTUNE

GB1GE21EE

21051001 Macis, TEL: 04-24733326