VictorTaichung

Management System
ISO 9001:2008
ISO 14001:2004
www.tuv.com
ID 0091003197

VERTICAL MACHINING CENTER RANGE

The Vcenter Range Profile

Increased productivity with every machining

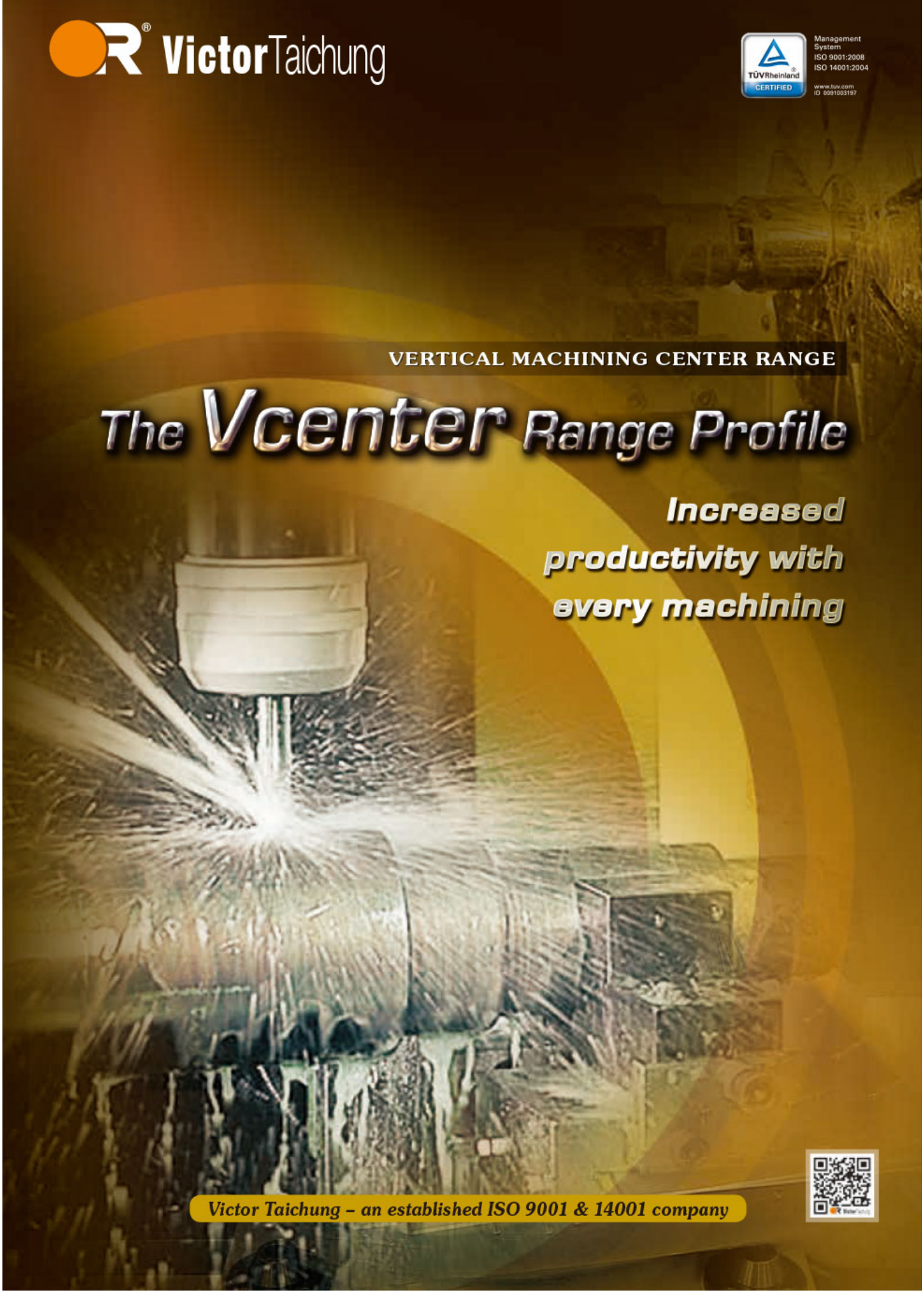

Victor Taichung – an established ISO 9001 & 14001 company

Vcenter - 55/70/85A/102A

High speed, high production machining centers that can make light work out of the most demanding of production schedules.

- Rapid feedrates of 36/36/24 m/min on Vcenter-55/70 and 36/36/20 m/min on Vcenter-85A/102A
- Tool changes of 1.5 seconds (T-T)
- 8000 rpm spindle with rigid tapping
- Bellows type guarding on Z axis
- Large work table for 4th axis applications
- 3 axis linear motion slideways

Victor
Machining

Vcenter - 85C/102C/110/130

Machining centers that mix high production demands with heavy cutting conditions.

- Rapid feedrates of 36/36/18 m/min on Vcenter-85C/102C and 24/24/18 m/min on Vcenter-110/130
- Tool changes of 1.5 seconds
- Tool capacity of 24 tools
- Very large work table for 4th axis applications
- 6000 rpm spindle with heavy duty roller bearings
- Spindle oil cooler (optional for Vcenter-85C/102C)
- Z axis box slideway

Run-up Testing

Victor Taichung's Own Spindle Assembly

- Spindle and headstock are both in-house designed and manufactured in the air conditioned assembly room to assure high quality and reliability.
- Every spindle has been inspected and tested with her own test record.

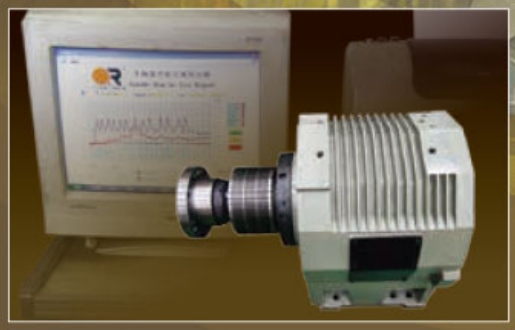

VICTOR-TAICHUNG

Vcenter - 85B/102B/145/165

Machining centers built to withstand the heaviest of today's cutting conditions.

- Heavy duty spindle roller bearings
- Bonded with low friction composite Turcite B
- All boxways with constant forced lubrication
- 2 speed gearbox for high torques at low rpm (optional for Vcenter-85B/102B)
- 3 axis box slideways

Vertical Center Range

Vcenter - 55/70 APC

Standard VMC with compact high speed APC
Front mounted APC allows easy access to both machine work area and pallet.

- Pallet loading capability of 200 kg for increased working range
- Pallet size 560 x 400 mm(Vcenter-55APC) / 720 x 400 mm(Vcenter-70APC) with bolt holes for work location
- Idle pallet is easily removed to allow use of additional pallets
- Hydraulic pallet clamping for max. stability during machining
- Direct mounted to machine for easy installation and reduced floor space
- Servo-driven rotary APC for fast pallet exchange 3 seconds(P-P)
- Front mounted APC with ergonomic design to allow easy operator access to pallet spindle and machine work area

Dynamic Balancing

GB Gauging

Spindle Assembly

Vcenter - 55 / 70

Maximum spindle heavy duty spindle

- A cartridge type spindle is used offering greater flexibility with a range of spindle configuration. Unlike our competitors, maximum support is offered around the spindle cartridge with a headstock casting that extends down as far as the spindle nose so that the bearing load areas are supported by the headstock as well as the cartridge.
- This heavy casting ensures any residual vibration is absorbed by the headstock rather than tooling only.
- Air curtain is included as standard to prevent the swarf getting into the spindle.
- Optional spindle oil cooler can be easily installed to offer constantly circulating cooling oil around the spindle cartridge.

Ram & Arm type ATC

- Rapid tool change is facilitated through the use of twin arm independent tool magazine with bidirectional random selection.
- The cam driven ATC offers optimal reliability and excellent service life.
- Side mounting of tool magazine ensures tools are kept out of machining area and free of swarf.

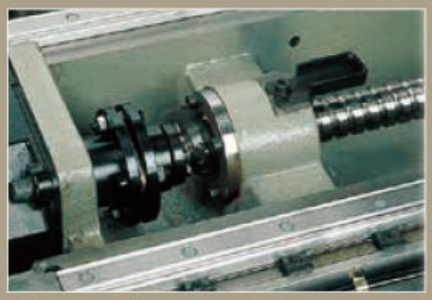

Direct coupled servo-motors

- To eliminate motor backlash all servo motors are direct coupled to the ballscrews while flexible couplings eliminate any noise due to minor misalignments encountered with other transmission systems.

Coolant flush onto bottom guarding

- High pressure coolant flushing away the swarf from the bottom guarding assures optimal chip disposal efficiency during machining.
- " Λ " type telescopic cover to avoid the swarf accumulation.

VICTOR-TAICHUNG

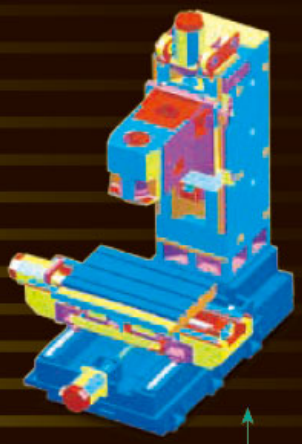

Superior casting design

- Advanced Finite Element Analysis technique is used to develop the rib structure to meet strict requirement for fast feed rate.
- Machine bed and column are made of nodular gray iron providing optimal damping properties while all castings are carried out following Meehanite process.

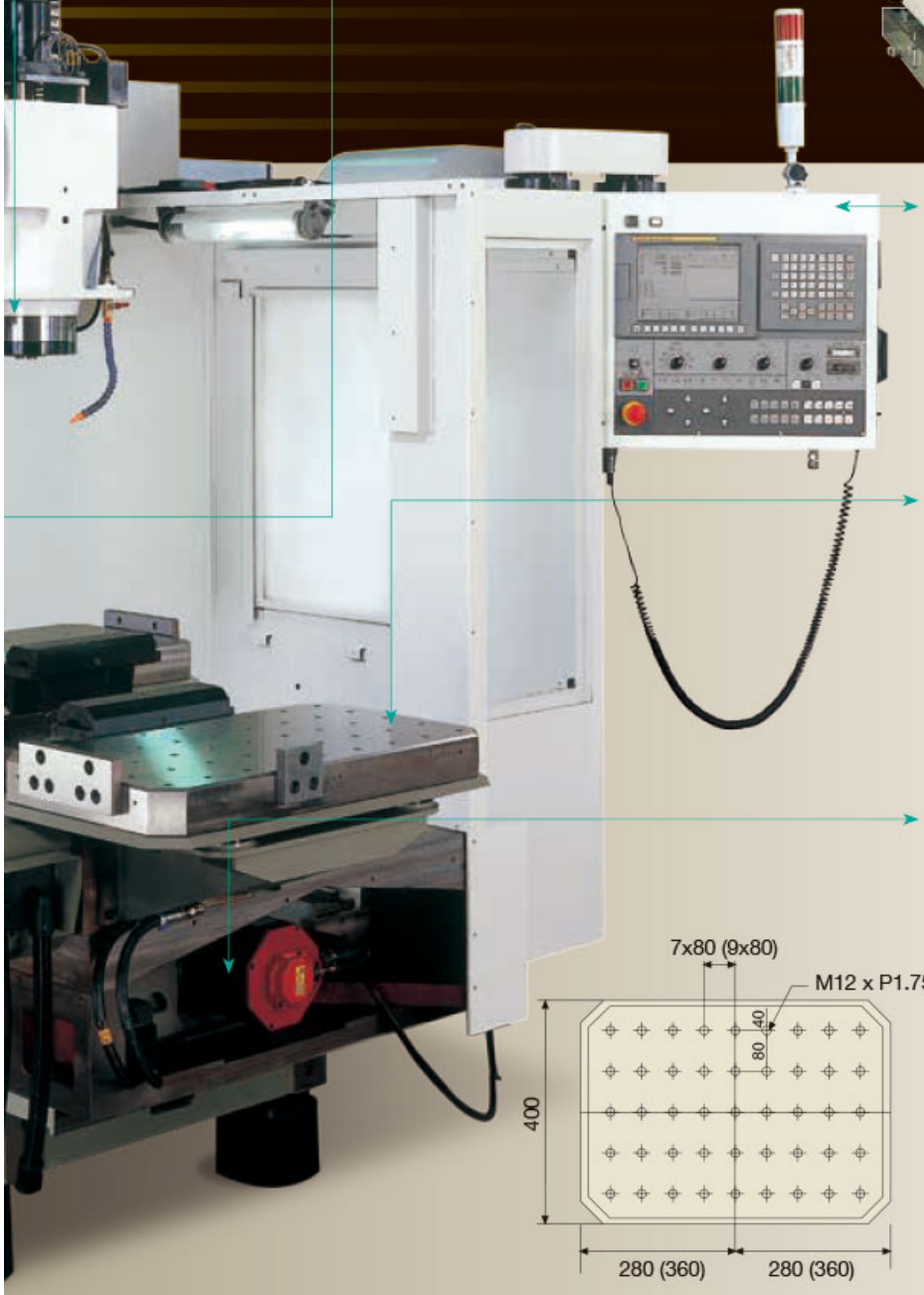

VICTOR NC Package

- FANUC 0i / 32i / 31i controllers to meet various requirement for batch production or high speed machining.
- Heidenhain TNC-620 controller with user-friendly conversational function to meets mold manufacturing requirement.

Optional APC (Auto Pallet Changer)

- To eliminate idle time due to workpiece loading and unloading, double pallet APC is available.
- Rotary type APC front mounted on the machine offers quick change-over time 3 seconds (pallet to pallet) or 12.5 seconds (chip to chip) including air sealing detecting time to assure high reliability.
- Direct mounted to machine for easy installation and reduced floor space.

Front mounted Y-axis motor

- The Y axis servo motor is front mounted to reduce the overall length of the ballscrew thus reducing the thermal displacement and increasing structure rigidity.

Vcenter - 85 / 102 "ABC"

Innovative design with versatile models
A : All linear guides for 3 axes
B : Box slideways for 3 axes
C : Combined design with box slideway column

Efficient tool changer

- Twin arm type ATC performs better overall continuous tool changes compared with disc type tool changer, while at the same time offering faster tool change - merely 1.5 seconds with BT-40 tooling.
- Victor's PLC design allows tools to be exchanged with oversized tools in a single time - no need to waste time with 2 separate tool changes.
- Optional BT-50 tooling with GEARBOX and 24 tool magazine enhances the machining power for heavy cutting (Model B).

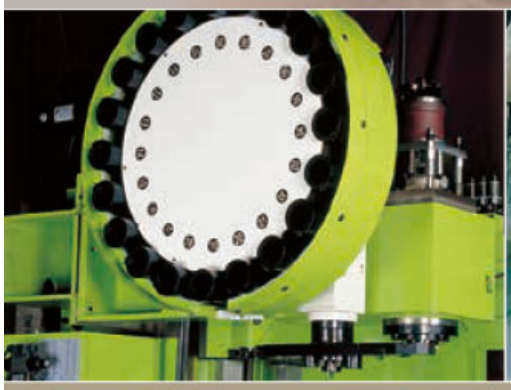

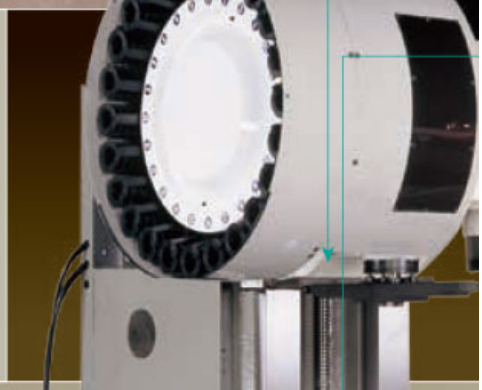

Strong machine structure

- Stiffness enhanced column with big triangle bottom offers the maximum cutting stability whatever this machine is used with rapid feed (Model A) or with heavy cutting (Model B).
- Machine bed and saddle feature triangular cast structure to evenly distribute the machine loading, while cross diagonal ribbing in the column minimizes distortion and twisting during operation.
- All major structural components are made from Meehanite cast iron to ensure consistent homogenous castings.

Front mounted Y axis servo motor

- Superior structure stiffness with the optimal rail spacing 700 mm supports the long table at the travel end of X axis movement.
- THREE supporting blocks in each X-axis guide and 2 blocks in each Y-axis guide guarantees the accuracy requirement.
- The Y axis servo motor is front mounted to reduce the overall length of the ballscrew thus reducing the thermal displacement and increasing structure rigidity.

VICTOR-TAICHUNG

Versatile heavy duty spindle

- The spindle is supported with heavy duty roller bearings with large contact areas that easily handles large axial and radial loads, while computer modeling helps determine bearing locations for maximum spindle stiffness.
- 8000 or 6000 rpm modularized spindle meets different machining demands.
- Optional 2-speed gearbox coupled with powerful spindle motor offers unrivaled metal removal rates. Oil cooling to the spindle and gearbox maintain low bearing temperature for extended spindle life.
- Optional spindle oil cooler can be easily installed to offer constantly circulating cooling oil around the spindle cartridge.

Versatile slide ways for optimal dynamic stiffness

- The box slideways (Models B, C) are cast into the machine so no distortion occurs due to thermal differences between the slide-ways and machine casting! This maintains alignment of the ways throughout the machine life.
- The plain bearings with large contact areas increases the dynamic stiffness and damping properties so the machine can handle high cutting feeds and heavier cuts.
- Forced lubrication and bonded Turcite-B further improves performance by eliminating stick slip characteristics normally inherent in plain bearings.
- Ball bar testing is used to verify machine accuracy in circular interpolation.

Coolant flush onto bottom guarding

- High pressure coolant flushing away the swarf from the bottom guarding assures optimal chip disposal efficiency during machining.
- "Λ" type telescopic cover to avoid the swarf accumulation. (for Models A,C)

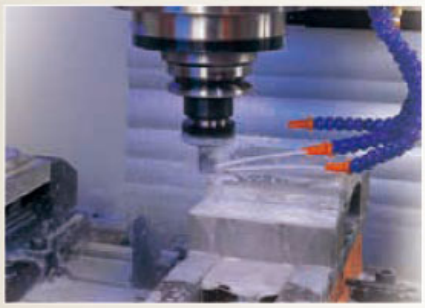

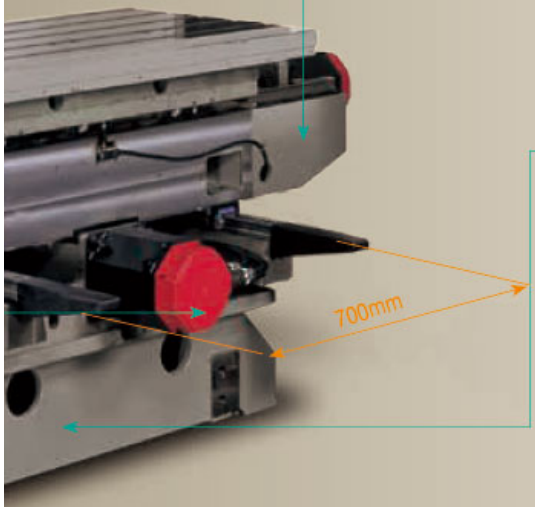

Minimizing the effects of thermal growth

- Symmetrical design and construction means heat generation is limited to minimize the effects of thermal growth on machine accuracies.
- Double-anchored ballscrews are pretensioned during assembly to absorb heat with minimal thermal growth.
- Effective chip evacuation from the machining area improves heat dissipation from the working area, while spindle oil cooling prevents excessive spindle growth.

Vcenter - 110 / 130

Maximum spindle heavy duty spindle

- A cartridge type spindle is used offering greater flexibility with a range of spindle configuration. Unlike our competitors, maximum support is offered around the spindle cartridge with a headstock casting that extends down as far as the spindle nose so that the bearing load areas are supported by the headstock as well as the cartridge.
- This heavy casting ensures any residual vibration is absorbed by the headstock rather than tooling only.
- Air curtain is included as standard to prevent the swarf getting into the spindle.

24 tool magazine

- Twin arm type ATC with 24 tool magazine guarantees cutting flexiability for most applications.
- Optional 32 tool magazine (chain type) or BT-50 24 tool magazine with gearbox are both available.

Cross-diagonal ribbing in column to prevent flexing during machine operation.

Triangular ribbed bed casting for improved support to guideways.

Superior casting design

- Machine bed and column are made of nodular gray iron providing optimal damping properties while all castings are carried out following the Meehanite process. Emphasis is placed on the rib structure rather than weight ratio is obtained.
- Advanced Finite Element Analysis technique is used to develop the rib structure to meet strict requirement for fast feed rate.

Spindle oil cooler (standard)

- While the spindle structure is built for maximum rigidity, it is also necessary to ensure maximum reliability and long bearing life. Cooling oil constantly circulates around the spindle cartridge to maintain the low temperature through the spindle rotation.

VICTOR-TAICHUNG

Automatic forced lubrication

- Lubricating oil is continuously supplied to all moving ways prolonging service life of the machine. Furthermore a drip supply of oil is provided to the ballscrews for both lubrication and heat dissipation.
- The oil supply is continually monitored by the control system so that any drop in pressure or leak is automatically detected and an alarm given.
- A lip around the machine bed collects the excess oil so that it can be re-circulated.

Three Y axis linear guides

- Superior structure stiffness with the optimal rail spacing supports the long table at the travel end of X axis movement.
- THREE Y axis linear guide design minimizes table overhang deformation due to gravity.
- THREE supporting blocks in each X-axis guide and 2 blocks in each Y-axis guide with width 35 mm (Vcenter-110) / 45 mm (Vcenter-130) guarantees the accuracy requirement.

Long Y axis travel with front mounted servo motor

- Long travel 600 mm.
- The Y axis servo motor is front mounted to reduce the overall length of the ballscrew thus reducing the thermal displacement and increasing structure rigidity.

Coolant flush onto bottom guarding

- High pressure coolant flushing away the swarf from the bottom guarding to assure optimal chip disposal efficiency during machining.

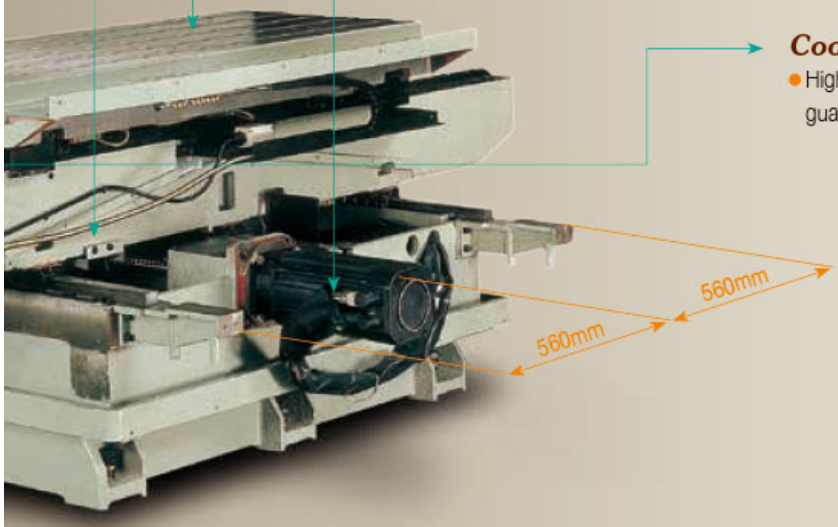

Vcenter - 145/165

Heavy duty spindle

- The spindle is supported with heavy duty roller bearings with large contact areas that easily handles large axial and radial loads, while computer modeling helps determine bearing locations for maximum spindle stiffness.
- The 2-speed gearbox coupled with powerful spindle motor offers unrivaled metal removal rates. Oil cooling to the spindle and gearbox maintain low bearing temperature for extended spindle life.

Efficient tool changer

- Twin arm type ATC with 24 tool disk magazine performs better overall continuous tool changes compared with disc type tool changer, while at the same time offering faster tool change: merely 4.9 seconds with BT-50 tooling.
- Victor's PLC design allows tools to be exchanged with oversized tools in a single time - no need to waste time with 2 separate tool changes.
- Optional 32 or 40 tool magazine is available.

Spindle oil cooler (standard)

- While the spindle structure is built for maximum rigidity, it is also necessary to ensure maximum reliability and long bearing life.
- Cooling oil constantly circulates around the spindle cartridge to maintain the low temperature during the spindle rotation.

Minimizing the effects of thermal growth

- Symmetrical design and construction means heat generation is limited to minimize the effects of thermal growth on machine accuracies. Double-anchored ballscrews are pretensioned during assembly to absorb heat with minimal thermal growth.
- Effective chip evacuation from the machining area improves heat dissipation from the working area, while spindle oil cooling prevents excessive spindle growth.

VICTOR-TAICHUNG

Precision machine alignment

- The traditional method of handscraping remains the most effective way of ensuring squareness and flatness in machine tools using plain bearing linear ways.
- With over 60 years experience in building machine tools using this traditional manufacturing manner, our understanding of the critical factors that ensure accuracy and durability are second to none. Highly skill personnel, trained in-house, are employed to make sure this handscraping is done to perfection.
- Ball bar testing is used to verify machine accuracy in circular interpolation.

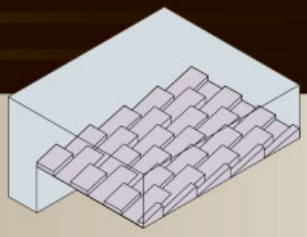

VICTOR NC Package

- FANUC 0i / 32i / 31i controls meet various requirement for batch production or high speed machining.
- Heidenhain TNC-620 / 640 controller with user-friendly conversational function to meets mold manufacturing requirement.

Box slideways for optimal dynamic stiffness

- Especially 4 box slideways used on the Y-axis eliminate table overhang and stabilize machine performance.
- The box slideways are cast into the machine so no distortion occurs due to thermal differences between the slide-ways and machine casting to maintain alignment of the ways throughout the machine life.
- The plain bearings with large contact areas increase the dynamic stiffness and damping properties so the machine can handle high cutting feeds and heavier cuts.
- Forced lubrication and bonded Turcite-B further improves performance by eliminating stick slip characteristics normally inherent in plain bearings.

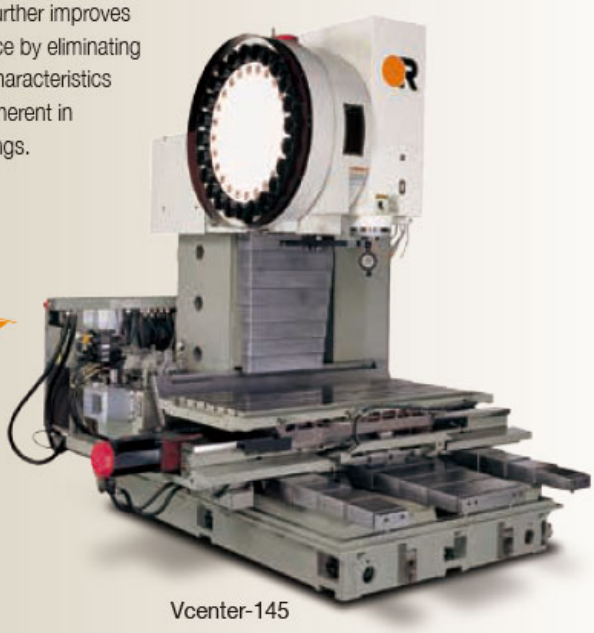

Vcenter-145

OPTIONS

Workpiece measurement

To reduce time spent setting workpiece positions and then manually inspecting finished parts, which would be better invested in machining, automatic workpiece measurement is available with the use of Renishaw® OMP-60 measuring probe.
With the system provided by Victor the workpiece position can be identified with the probe and work offsets automatically updated, enabling parts to be made right first time. During batch production in-processing checking can be performed on the machine, while for optimum accuracy in machining part inspection can be done after roughing so that finished part can maintain tight tolerances.

Linear scales for improved repeatability

Linear scales offer exceptional positioning accuracy up to 0.005 mm over full stroke. Heidenhain® or Fagor® with a thermal behaviour similar to that of the machine are selected so that thermal expansion can be compensated for further enhancing repeatability. Sealed encoders with durable Aluminum housing offer improved reliability and service life.

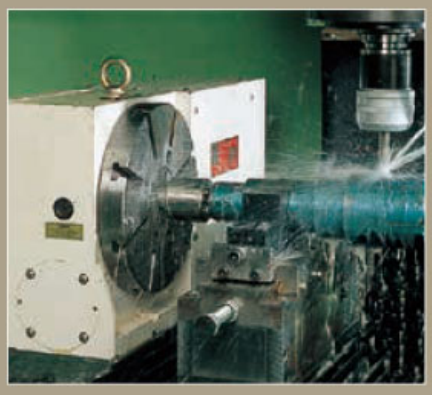

Automatic tool measurement

To reduce tool set-up time and improve machine operator interface Victor offers 2 automatic tool measuring systems:

Simple tool length measurement

Metrol system T-24E is mostly for tapping and drilling, as the probe used only measures the tool length. This simple cost effective system greatly reduces tool set-up time by automatically inputting tool length values once the tool is tipped off the probe.

Advanced tool measurement

Renishaw system TS-27R offers further advancement with the probe capable of measuring both tool lengths and diameters. This system is ideal for batch production where tools need to be constantly changed or replaced.

4th-axis CNC rotary table

To improve the machine's application range, a CNC rotary table can be installed with which 4 axes simultaneous machining can be realized. This function can eliminate multiple set-ups allowing multiple faces to be machined with a single set-up.

5th-axis rotary table is also available with tilting as well as rotary function.

Tilting B-axis is indexable with Fanuc 0i / 32i / 31i or full simultaneous rotation with Fanuc 31i-B5 control.

VICTOR-TAICHUNG

Fully enclosed guarding with optional CE marking

The machine is designed to meet the strictest safety standards with fully enclosed guarding to prevent operator access to the machining area during operation and coolant leaks in using high pressure coolants. All electrical components meet CE mark requirements while optional door interlocks and magazine guarding bring the machine up to full CE standard.

Through spindle coolant

For improved deep drilling and boring capability, coolant can be forced through the center of the spindle under high pressure directly to the cutting area. To ensure long and reliable running of this system, fine particles produced during machining must be filtered out to prevent damage to the spindle. Victor's customized cleaning system by centrifugal dispersion or replaceable filter cores is far more reliable with less maintenance than conventional system to avoid the fine particles flowing into the spindle.

Oil hole coolant

As an alternative to through spindle coolant, it is possible to supply coolant through the toolholder, using an adaptor located on the spindle nose. High pressure (Grundfos pump SPK2-3 or MTH2-50/3) can be supplied with no need for sophisticated filter system as the coolant bypasses the spindle.

Coolant Options

Std. - directional pipe
Purpose - general
(Vcenter-145/165)

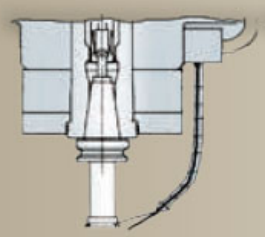

Std. - coolant ring
Purpose - general
(Vcenter-55/70/85/102/110/130/165)

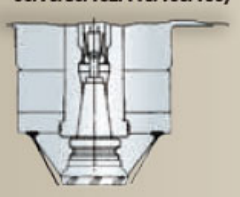

Opt. - oil hole coolant
Purpose - drilling, boring

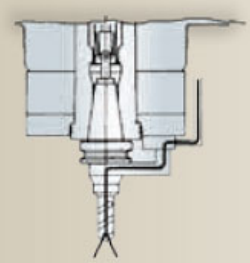

Opt. - thru. spindle coolant
Purpose - drilling, boring

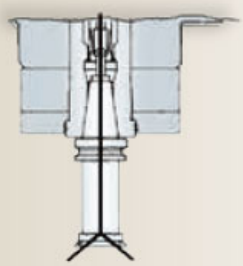

Opt. - oil mist
Purpose - tapping, reaming

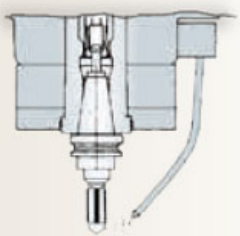

Victor Taichung's Own Spindle

6000/8000/10000 rpm belt-driven spindle

Our modular headstock design offers the options 6000 / 8000 / 10000 rpm belt-driven spindles as a cost effective solution for production work and job shops requiring high spindle speed.

- Rigid structure utilizing roller bearings for maximum radial support
- High torque output at low rpm
- Superior run-out under heavy cutting

12000/15000rpm directly coupled spindle

Without belt tension and noise, the directly coupled spindle (DCS) offers high speed cutting with minimal vibration for improved surface finish and accuracy. Oil cooling through the spindle cartridge minimizes thermal growth at high speed, and a separate air curtain circulated around the front bearings ensures bearings and motor are kept free of contamination for longer service life.

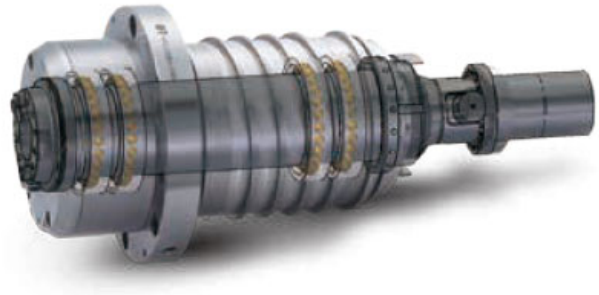

Gearbox for extra torque in heavy cutting

Victor Taichung offers gearbox circulated with the coolant oil to minimize noise at high speeds to prolong gear life. For high efficient power transmission, minimal backlash gears are used to guarantee smooth running.

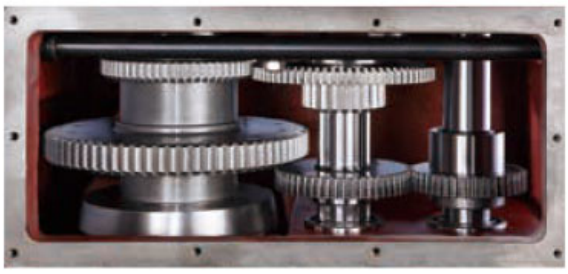

Fanuc controller

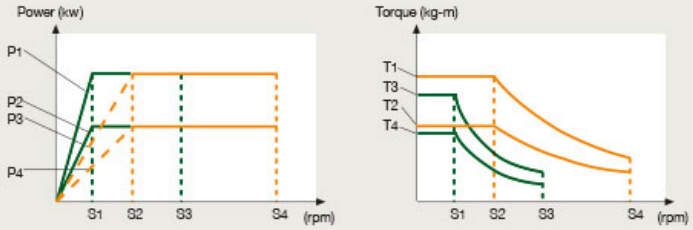

P1(*30 min. in low winding)	S1(base RPM in low winding)	T1(*30 min. in low winding)	S1(base RPM in low winding)
P2(cont. in low winding)	S2(base RPM in high winding)	T2(cont. in low winding)	S2(base RPM in high winding)
P3(*30 min. in high winding)	S3(max. RPM in low winding)	T3(*30 min. in high winding)	S3(max. RPM in low winding)
P4(cont. in high winding)	S4(max. RPM in high winding)	T4(cont. in high winding)	S4(max. RPM in high winding)

**30 min. may be replaced by 15%, 15 min. or 20 min. according to Fanuc technical specification.*

Belt-driven spindles (no gearbox):

Model	Spindle Motor	Base Speed (rpm)		Max. Speed (rpm)	P_Cont. (kW)	P. (kW)	Tor._Cont. (kg-m)	Tor. (kg-m)
Vc-55/70	αP12i	Low winding	500	1500	3.7	7.5 (15 min.)	7.2	14.59 (15 min.)
		High winding	750	8000	5.5	7.5 (30 min.)	7.13	9.72 (30 min.)
Opt.	α8i	1500		10000	7.5	11 (30 min.)	4.86	6.62 (15 min.)
Opt.	αP12i	Low winding	500	1500	3.7	7.5 (15 min.)	7.2	14.59 (15 min.)
		High winding	750	8000	5.5	7.5 (30 min.)	7.13	9.72 (30 min.)
Vc-85A (B/C)	αP12i	Low winding	500	1500	3.7	7.5 (15 min.)	7.2	14.59 (15 min.)
		High winding	750	8000 (6000)	5.5	7.5 (30 min.)	7.13	9.72 (30 min.)
Opt.	αP15i	Low winding	500	1500	5.5	9 (15 min.)	9.73	17.51 (15 min.)
		High winding	750	6000 (8000)	7.5	9 (30 min.)	9.73	11.67 (30 min.)
Vc-102B/C (A) Vc-110/130	αP15i	Low winding	500	1500	5.5	9 (15 min.)	9.73	17.51 (15 min.)
		High winding	750	6000 (8000)	7.5	9 (30 min.)	9.73	11.67 (30 min.)
Opt.	αP18i	Low winding	500	1500	6	11 (15 min.)	11.68	21.41 (15 min.)
		High winding	750	6000 (8000)	9	11 (30 min.)	11.68	14.27 (30 min.)
Opt.	αP22i	Low winding	500	1500	7.5	15 (15 min.)	14.59	29.18 (15 min.)
		High winding	750	6000	11	15 (30 min.)	14.37	19.59 (30 min.)

With gearbox (standard on Vc-145/165):

Model	Spindle Motor	Base Speed (rpm)		Max. Speed (rpm)	P_Cont. (kW)	P. (kW)	Tor._Cont. (kg-m)	Tor. (kg-m)
Vc-85/102/ 110/130	α8i	1st step	375	1500	7.5	11 (30 min.)	20.36	26.16 (30 min.)
		2nd step	1500	6000	7.5	11 (30 min.)	4.87	6.64 (30 min.)
Opt.	α12i	1st step	375	1500	11	15 (30 min.)	26.16	33.45 (30 min.)
		2nd step	1500	6000	11	15 (30 min.)	6.64	9.05 (30 min.)
Vc-145	α12i	1st step	355	1500	11	15 (30 min.)	30.2	41.2 (30 min.)
		2nd step	1500	6000	11	15 (30 min.)	7.14	9.74 (30 min.)
Vc-165 (Vc-145 opt.)	α15i	1st step	355	1500	15	18.5 (30 min.)	41.2	56.2 (30 min.)
		2nd step	1500	6000	15	18.5 (30 min.)	9.74	13.29 (30 min.)

Heidenhain controller

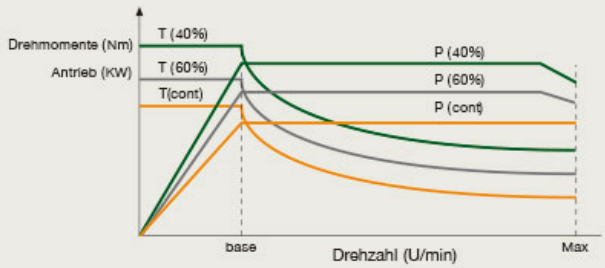

Model	motor	Power (kW) Cont.	60%	40%	Torque (Kg-m) Cont.	60%	40%	Speed (rpm) base	max.
Vc-55/70	QAN 200L	7.5	9.8	11.5	4.9	6.38	7.48	1500	8000
Vc-85/102	QAN 200L	7.5	9.8	11.5	19.52	25.52	29.92	375	1500
110/130					4.9	6.38	7.48	1500	6000
Opt.	QAN 200U	10	12.5	14	26.04	32.52	36.45	375	1500
					6.51	8.13	9.11	1500	6000
Vc-145/165	QAN 260L	20	25	30	54.93	68.69	82.41	355	1500
					16.24	19.49	24.03	1500	6000

Victor Taichung's NC Package

Fanuc 0i/32i/31i controls

Guarantee reliability and stability from over 40 years experience

Having worked closely with FANUC since we developed our first CNC machine in 1978, our standard Fanuc 0i-M control package offers optimum reliability with the highest level of machine integration to meet the demands of most productions. With PLC developed in-house by highly experience engineers, Victor Taichung's Vcenters offer numerous safety features and maximum machine efficiency. For higher speed and precision, the control option Data Server board can be installed to extend the memory length for upgrading the data transfer rate. The machine controller can be upgraded to 31i-B control which is capable of addressing 600 blocks as standard and optionally 1000 blocks available by the so-called AICC-2 with HSP function (High Speed Processing) to further reduce the block addressing time for better surface finish.

MGI (Manual Guide i) + VSS (Victor Smart Software) Macros

With the optional 10.4" color display included, Victor Taichung's Fanuc control package includes conversational function MANUAL GUIDE I (MGI) to reduce the programming time for easier operation. Through the latest technology for AI contouring control (AICC), Fanuc 0i-MD control is capable of addressing look-ahead up to 200 blocks to offer optimal reliability with the highest level of machine integration.
Through exclusive software developed in house. VSS macros (Victor GUI) enhance not only operation to reduce tool set-up time but also safety features to protect costly spindle. Productivity can be further increased when the adaptive controlled cutting is implemented.

Smart workpieoe measurement

Adaptive outting at oonstant loading

Air Bag (abnormal load monitoring)

Renishaw® GUI

Heidenhain TNC-620/640 controls

Powerful dialog programming with fully alphanumeric keyboard, Heidenhain control is also available on Vcenter's range. Without remembering complicated G codes, sophisticated graphic functions with 15" TFT monitor make programming check easy. Hiedenhain TNC-620 / 640 controls are capable of addressing more than 1000 blocks and further make use of hard drive memory for advanced 4 or 5 axis simultaneous control.

Control features for fast contour milling (Victor Taichung's standard)

Feature \ Controller	Fanuc			Heidenhain	
	0i-MF (Type 1)	32*i*-B	31*i*-B	TNC-620	TNC-640
Block addressing time	4 ms (Opt. 2 ms by AICC-2)	2 ms	0.4 ms	1.5 ms	0.5 ms
Data storage	1280m (512kB) Opt. 5120m (2MB)	1280m (512kB) Opt. 5120m (2MB)	2560m (1MB) Opt. 10240m (8MB)	Min. 2GB	Min. 2GB
Data server (Memory extension)	Opt. (by CF Card)	Opt. (by CF card)	Std.	N.A. (8GB with CFR)	Std. 21GB (by SSRD) Opt. 144GB (by HRD)
Ethernet link	Std.	Std.	Std.	Std.	Std.
Preview contouring (look ahead blocks)	40 (Opt. 200 by AICC-2 or 400 by AICC-3)	200 (Opt. 400 by AICC-2)	600 (Opt. 1000 by HSP)	5000	5000
Graphic display	8.4" (Opt. 10.4")	10.4"	10.4"	15"	15"
Conversational function	Opt. (Manual guide I + VSS macros)	Manual guide i	Manual guide i	Std.	Std.
Data transfer interface	PCMCIA + USB	PCMCIA + USB	PCMCIA + USB	USB	USB

Machine Specification

ITEM		Units	Vcenter-55	Vcenter-70	Vcenter-85A/B/C
Travel	X axis travel	mm	550	700	850
	Y axis travel	mm	460 (430 for APC)	480 (430 for APC)	520 (opt. 600)
	Z axis travel	mm	460	510	560
Distance	Spindle center to column	mm	544.5	544.5	600
	Spindle nose to table surface	mm	150 ~ 610	150 ~ 660	150 ~ 710
Table	Table work area	mm	800 x 460	800 x 460	1100 x 510
	Dimension of T-slot	mm	4 x 18 x 100	4 x 18 x 100	5 x 18 x 100
	Max. table load	kg	300	500	750 (VC-85A/C) 1000 (VC-85B)
Spindle	Spindle taper		BT-40	BT-40	BT-40
	Spindle motor-cont / 30 min	kW(AC)	5.5 / 7.5	5.5 / 7.5	5.5 / 7.5
	Spindle speed	rpm	8000	8000	8000 (VC-85A) 6000 (VC-85B/C)
Feed rate	Rapid feed rate-X/Y/Z	m/min	36 / 36 / 24 (opt. 42/42/30)	36 / 36 / 24 (opt. 42/42/30)	36 / 36 / 20 (VC-85A) 20 / 20 / 18 (VC-85B) 36 / 36 / 18 (VC-85C)
	Axis feed motor-X/Y/Z	kW	3 / 3 / 3	3 / 3 / 3	3 / 3 / 3
	Cutting feedrate by table	m/min	18	18	18
	X/Y ballscrew (dia. x pitch)	mm	40 x P16	40 x P16	40 x P12
	Z ballscrew	mm	40 x P12	40 x P12	40 x P10
Tools	Max. tool length	mm	250	250	300
	Max. tool weight	kg	8	8	8
	Magazine capacity		24 (opt. 40)	24 (opt. 40)	24 (opt. 32, 40)
	Max. tool diameter (without adjacent tools)	mm	80 (125)	80 (125)	80 (125)
	Tool exchanging time	sec.	1.5 (T-T), 4.8 (C-C)	1.5 (T-T), 4.9 (C-C)	1.5 (T-T), 5.9 (C-C)
	Pull stud angle	deg.	90 (opt. 45)	90 (opt. 45)	90 (opt. 45)
	Tool selection method		Random	Random	Random
Machine	Power requirement (excl. CTS)	kVA	23	23	23
	Min./Max. air pressure	kg/cm²	5.5 / 6.5	5.5 / 6.5	5.5 / 6.5
	Coolant tank capacity	L	225	240	280
	Std. NC controller		FANUC 0i-M	FANUC 0i-M	FANUC 0i-M
	Floor space requirement	mm	1955 x 2350	2123 x 2350	2450 x 2400
	Max. Machine height	mm	2500	2550	2640
	Net weight	kg	4600	4700	5950

Tool shank (BT-40)

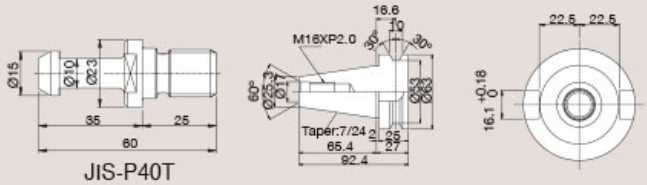

JIS-P40T

Tool shank (BT-50)

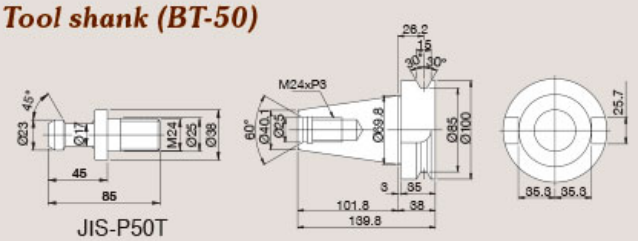

JIS-P50T

Standard accessories

- Fully enclosed splash guarding
- Hand tools and tool box
- T nuts for table slot
- Coolant flush on bottom guarding (except Vcenter-145)
- Built-in work light
- Spindle oil cooler (only for Vcenter-110/130/145/165)
- Auto power off system
- Leveling blocks
- Program end light
- Rigid tapping
- Alarm lamp
- Remote MPG
- Air conditioner for electrical cabinet
- Screw chip removers (for Vcenter-165)
- Air blow (by M-code control)
- Fanuc e-book (CD-ROM)

Vcenter-102A/B/C	Vcenter-110	Vcenter-130	Vcenter-145	Vcenter-165
1020	1100	1300	1450	1650
520 (opt. 600)	600	600	700	850
560	560	610	700	900
600	600	600	725	872
150 ~ 710	180 ~ 740	155 ~ 765	200 ~ 900	200 ~ 1100
1100 x 510	1400 x 550	1400 x 550	1650 x 650	1700 x 800
5 x 18 x 100	5 x 18 x 100	5 x 18 x 100	6 x 18 x 100	5 x 22 x 150
750 (VC-102A/C) 1000 (VC-102B)	800	800	2200	2500
BT-40	BT-40	BT-40	BT-50	BBT-50
7.5 / 9.0	7.5 / 9.0	7.5 / 9.0	11 / 15	15 / 18.5
8000 (VC-102A) 6000 (VC-102B/C)	6000	6000	6000	6000
36 / 36 / 20 (VC-102A) 20 / 20 / 18 (VC-102B) 36 / 36 / 18 (VC-102C)	24 / 24 / 18	24 / 24 / 18	18 / 18 / 15	20 / 20 / 18
3 / 3 / 3	3 / 3 / 3	3 / 3 / 3	4 / 4 / 4	4 / 4 / 7
18	18	18	18	18
40 x P12	40 x P12	40 x P12	50 x P10	50 x P10
40 x P10	40 x P10	40 x P10	50 x P10	50 x P10
300	300	300	400	400
8	8	8	15	15
24 (opt. 32, 40)	24 (opt. 32, 40)	24 (opt. 32, 40)	24 (opt. 32, 40)	24 (opt. 40)
80 (125)	80 (125)	80 (125)	110 (200)	127 (250)
1.5 (T-T), 6.2 (C-C)	1.5 (T-T), 6.4 (C-C)	1.5 (T-T), 6.8 (C-C)	4.9 (T-T), 11 (C-C)	4.6 (T-T), 10.9 (C-C)
90 (opt. 45)	90 (opt.45)	90 (opt. 45)	45	45
Random	Random	Random	Random	Random
23	23	23	30	35
5.5 / 6.5	5.5 / 6.5	5.5 / 6.5	5.5 / 6.5	5.5 ~ 6.5
280	350 (opt. 2 x 240)	350 (opt. 2 x 250)	600 (2 x 300)	760
FANUC 0i-M	FANUC 0i-M	FANUC 0i-M	FANUC 0i-M	FANUC 0i-M (10.4")
2750 x 2400	3200 x 2625	3500 x 2625	3800 x 3765	4276 x 3370
2640	2895	2920	3029	3617
6150	7100	7800	11780	16420

Optional accessories

- Chip conveyor with cart
  (2 chip conveyors for Vcenter-145)
  (Please specify when machining
  Aluminum or Cast Iron)
- Spindle oil cooler
  (for Vcenter-55/70/85/102)
- 2-step gearbox
  (max. spindle speed 6000 rpm)
- High powered spindle motor
- Oil skimmer
- Oil hole coolant
- Coolant through spindle
- Air blow system
- Linear scale feedback
- Auto tool length measurement
- Electrical counterbalance
- Workpiece measurement
- 4th axis rotary table
- Higher column with spacer
- Table shower system
- Semi enclosed splash guarding
  (for Vcenter -145 only)
- BT-50 tooling with gearbox
  (for Vcenter-85/102/110/130)
- Fanuc manuals

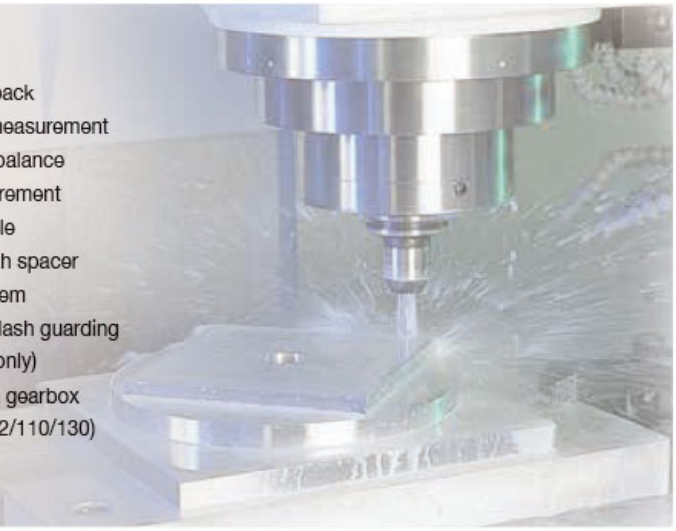

Victor Taichung's Fanuc 0i-MF (Type 1)/32i-B/31i-B Control Specifications

Standard:

ITEM	SPECIFICATION	DESCRIPTION
Controlled Axes:		
1.	Controlled Axes	3 Axes (X, Y, Z)
2.	Simultaneous Controlled Axes	Position / Linear Interpolation / Circular Interpolation (3 / 3 / 2)
3.	Least Input Increment	0.001 mm / 0.0001 inch / 0.001 deg.
4.	Least Input Increment 1/10	0.0001 mm / 0.00001 inch / 0.0001 deg.
5.	Max. Command Value	± 99999.999 mm (± 9999.9999 in)
6.	Fine Acceleration & Deceleration Control	Std.
7.	High Speed HRV Control	Std.
8.	Inch / Metric Conversion	Std. (G20 / G21)
9.	Interlock	All Axes / Each Axis / Cutting Block Start
10.	Machine Lock	All Axes / Each Axis
11.	Emergency Stop	Std.
12.	Over-Travel	Std.
13.	Stored Stroke Check 1 And Check 2	Std.
14.	Mirror Image	Each Axis
15.	Mirror Image M73, M74, M75, M76	X, Y Axes
16.	Follow-Up	Std.
17.	Position switch (with Victor's own PLC)	Std.
Operation:		
1.	Automatic Operation	Std.
2.	MDI Operation	MDI B
3.	DNC Operation	Reader / Puncher Interface Is Required
4.	DNC Operation With Memory Card	PCMCIA Card Attachment Is Required
5.	Program Number Search	Std.
6.	Sequence Number Search	Std.
7.	Sequence Number comparison and stop	Std.
8.	Buffer Register	Std.
9.	Dry Run	Std.
10.	Single Block	Std.
11.	Jog Feed	Std.
12.	Manual Reference Position Return	Std.
13.	Manual Handle Feed	1 Unit / Each Path
14.	Manual Handle Feed Rate	X1, X10, X100
15.	Z Axis Neglect	Std.
Interpolation:		
1.	Positioning	G00
2.	Single Direction Positioning	G60
3.	Exact Stop Mode	G61
4.	Exact Stop	G09
5.	Linear Interpolation	G01
6.	Circular Interpolation	G02, G03 (Multi-Quadrant Is Possible)
7.	Dwell	G04
8.	Helical Interpolation	Std.
9.	Skip Function	G31
10.	Reference Position Return	G28
11.	Reference Position Return Check	G27
12.	2nd / 3rd / 4th Reference Position Return	Std.
Feed:		
1.	Rapid Traverse Rate	Std.
2.	Rapid Traverse Override	F0, 25%, 50%, 100%
3.	Feed Per Minute	G94 (mm/min)
4.	Tangential Speed Constant Control	Std.
5.	Cutting Feed Rate Clamp	Std.
6.	Automatic Acceleration / Deceleration	Rapid Traverse: Linear; Cutting Feed: Exponential
7.	Rapid traverse Bell-shaped Acc. / Deceleration	Std. (G00)
8.	Bell-shaped Acc. / Deceleration Before & After Cutting Feed Interpolation	Std. (G01)
9.	Automatic Corner Deceleration	Std. (G64)
10.	Linear Acc / Deceleration Before & After Cutting Feed Interpolation	Std. (G01)
11.	Feed Rate Override	0~150%
12.	Jog Override	0~100%
13.	Automatic Corner Override	G62.
14.	Feed Stop	Std.
15.	AI contour control (AICC, G05.1) (in total)	200 blocks (0i/32i with AICC-2)
16.	AICC-2 + High speed processing (G05.1) (in total)	600 blocks (31i)
17.	Jerk Control	Std. (31i)
18.	Rigid Tapping Bell-Shaped Acc. / Deceleration	Std.
19.	Feed rate clamp by arc radius (G02/G03)	Std.
Program Input:		
1.	EIA / ISO Automatic Recognition	Std.
2.	Label Skip	Std.
3.	Parity Check	Std.
4.	Control In / Out	Std.
5.	Optional Block Skip	1
6.	Max. Programmable Dimension	± 8-Digit
7.	Program Number	O4-Digit
8.	Sequence Number	N5-Digit
9.	Absolute / Incremental Programming	G90 / G91
10.	(Pocket Calculator Type) Decimal Point Programming	Std.
11.	Input Unit 10 Time Multiply	Std.
12.	Plane Selection	G17, G18, G19
13.	Rotary Axis Designation	Std.
14.	Rotary Axis Roll-Over Function	Std.
15.	Polar coordinate command	G16.
16.	Coordinate System Setting	Std.
17.	Automatic Coordinate System Setting	Std.
18.	Work Piece Coordinate System	G52, G53, G54~G59
19.	Addition of Work Piece Coordinate System Pair	48 Pairs
20.	Manual Absolute On And Off	Std.
21.	Optional Chamfering / Corner R	Std.
22.	Programmable Data Input	G10
23.	Sub Program Call	4 (0i/32i) or 10 (31i) folds nested
24.	Custom Macro B	Std.
25.	Addition of Custom Macro Common Variables	#100~#199, #500~#999
26.	Canned Cycles For Milling	G73 / G74 / G76, G80-G89, G98 / G99
27.	Small hole peck drilling cycle	G83
28.	Circular Interpolation By R Programming	Std.
29.	Program Format	FANUC Std. Format
30.	Program Stop / Program End	M00 / M01 / M02 / M30
31.	Reset	Std.
32.	Scaling	G51
33.	Coordinate System Rotation	G68
Auxiliary Spindle Speed Function:		
1.	Auxiliary Function Lock	Std.
2.	High Speed M / S / T Interface	Std.
3.	Spindle Speed Function	Std.
4.	Spindle Override	50~120%
5.	1st Spindle Orientation	Std.
6.	M Code Function	M3 Digit
7.	S Code Function	S5 Digit
8.	T Code Function	T2 Digit
9.	Rigid Tapping	Std.
Tool Function & Tool Compensation:		
1.	Tool Function	T8 Digit
2.	Tool Offset Pairs	± 6-digit, 400 (0i/32i), 999 (31i)
3.	Tool Offset Memory C	Std. (D / H codes are separated)
4.	Tool Length Compensation	G43-G44, G45-G48, G49
5.	Cutting Compensation C	Std.
Accuracy Compensation:		
1.	Backlash Compensation	Rapid Traverse / Cutting Feed
2.	Stored Pitch Error Compensation	Std.
Edit Operation:		
1.	Part Program Storage Length (in Total)	1280m (512KB) (0i/32i), 2560m (31i)
2.	Number Of Registered Programs (in Total)	400 (0i/32i), 1000 (31i)
3.	Part Program Editing / Protect	Std.
4.	Background Editing	Std.
5.	Memory card editing	Std.(0i-F)
Setting And Display:		
1.	Status Display	Std.
2.	Clock Function	Std.
3.	Current Position Display	Std.
4.	Program Display	Program Name 31 Characters
5.	Parameter Setting And Display	Std.
6.	Self Diagnosis Function	Std.
7.	Alarm Display	Std.
8.	Alarm History Display	25
9.	Operation History Display	Std.
10.	Help Function	Std.
11.	Run Hour And Parts Count Display	Std.
12.	Actual Cutting Feedrate Display	Std.
13.	Display Of Spindle Speed And T Code At All Screens	Std.
14.	Graphic Function	Std.
15.	Dynamic Graphic Display	Std.
16.	Servo Setting Screen	Std.
17.	Spindle Setting Screen	Std.
18.	Display Of Hardware And Software Configuration	Std.
19.	Multi-Language Display	Std.
20.	Data Protection Key	Std.
21.	Erase CRT Screen Display	Std.
22.	Machining Condition Selecting Screen	Std.
23.	Color LCD / MDI	8.4" (0i), 10.4" (0i/32i/31i)
Data Input / Output:		
1.	Reader / Puncher Interface	RS-232 Interface
2.	External Work Piece Number Search	9999
3.	Memory Card Interface	Std.
4.	Embedded Ethernet (10Mbps)	Std.
5.	USB Device	Std.

Options:

	With Hardware Included:	**0i-MD/F**	**32i-B**	**31i-B**
1.	Conversational Programming (Manual Guide i)*1	□	Std.	Std.
2.	Conversational Programming (Super Cap i)	N.A.	N.A.	N.A.
3.	Data server (with PCB and CF card 1 GB)	□	□	Std.
4.	Fast Ethernet (100 Mbps, Available In Data Server)	□	Std.	Std.
5.	Tool life management (2 buttons on control panel)	□	□	□
6.	Part Program Storage Length 5120 m (2MB in total)	□	□	□
7.	Part Program Storage Length 8MB in total	N.A.	N.A.	□
8.	Program restart	□	□	□
9.	Optional block skip 9 blocks	□	□	□
10.	High Precision Contour Control (with RISC board)	N.A.	N.A.	Std.
11.	Profibus	□	□	□
12.	5-Axis Simultaneous Control	N.A.	N.A.	□ (31i-B5)
13.	AI contour control II (AICC-2, G05.1, 200 blocks)	□	Std.	Std.
14.	Look ahead block expansion (400 blocks in total)	□	□	N.A.
	Without Hardware Included:			
15.	Tool Load Monitoring (With Victor Own PLC)	□	□	□
16.	Programmable Mirror Image (G50.1)	□	□	□
17.	Bi-directional Pitch Error Compensation	□	□	□
18.	Addition Of Tool Pairs For Tool Life Management 512 Sets	N.A.	□	□
19.	Cylindrical Interpolation (G7.1) (Used On 4th-Axis)	Std.	□	□
20.	Interruption Type Custom Macro	N.A.	□	□
21.	Addition Of Work-Piece Coordinate Systems 300 Sets	N.A.	N.A.	□
22.	Exponential Interpolation (G2.3)	N.A.	N.A.	□
23.	Smooth Interpolation	N.A.	N.A.	□
24.	Spiral / Conical Interpolation	N.A.	N.A.	□
25.	Polar coordinate Interpolation	N.A.	□	□
26.	Floating Reference Position Return	N.A.	N.A.	□
27.	Hypothetical Axis Interpolation (G07)	N.A.	N.A.	□
28.	Tool Retract And Return (G10.6 With Victor Own PLC)	N.A.	N.A.	□
29.	NURBS Interpolation (Only Avail. In HPCC / RISC)	N.A.	N.A.	□

*1. Fanuc "Manual Guide I" is only available on 10.4" screen.

Machine Dimension (mm)

VICTOR-TAICHUNG

Vcenter-55/70/85/102/110/130

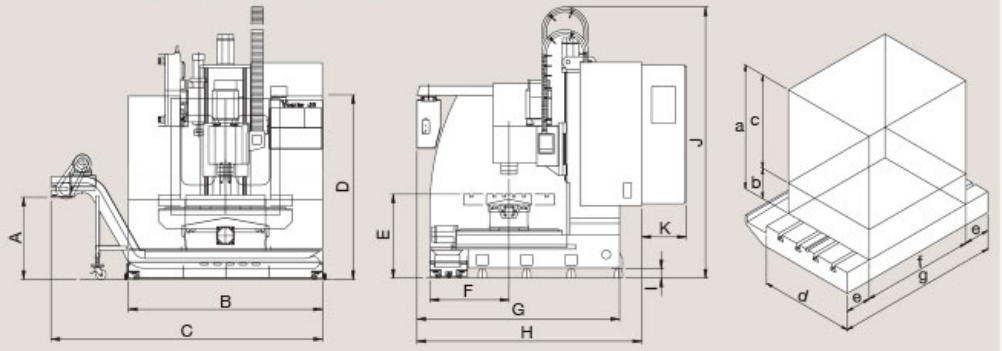

Vcenter-55APC (Vcenter-70APC)

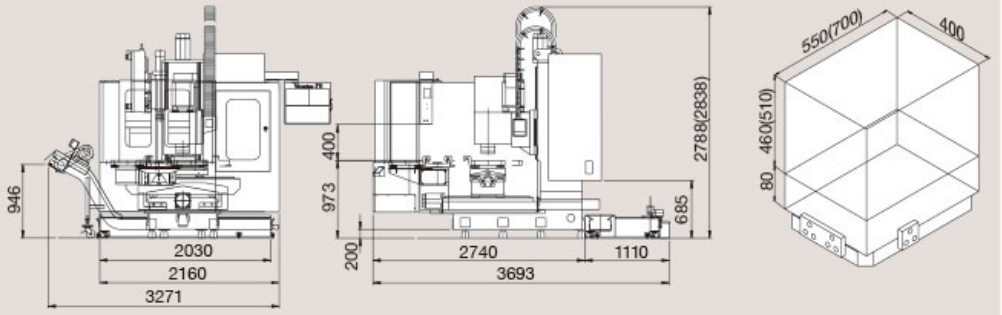

• Vcenter-55/70

A	764	a	610/660
B	1965/2090	b	150
C	2905/2952	c	460/510
D	1900	d	460
E	916	e	125/50
F	800	f	550/700
G	2253	g	800
H	2478		
I	120		
J	2592/2642		
K	450		

• Vcenter-85/102

A	764	a	710
B	2450/2750	b	150
C	3303/3594	c	560
D	1958	d	520
E	919	e	125/40
F	800	f	850/1020
G	2310	g	1100
H	2400		
I	90		
J	2440-2640		
K	450		

• Vcenter-110/130

A	769	a	740/765
B	3200/3500	b	180/155
C	4232/4530	c	560/610
D	1968	d	550
E	975	e	150/50
F	889	f	1100/1300
G	2495	g	1400
H	2625		
I	155		
J	2640-2920		
K	600		

Vcenter-145

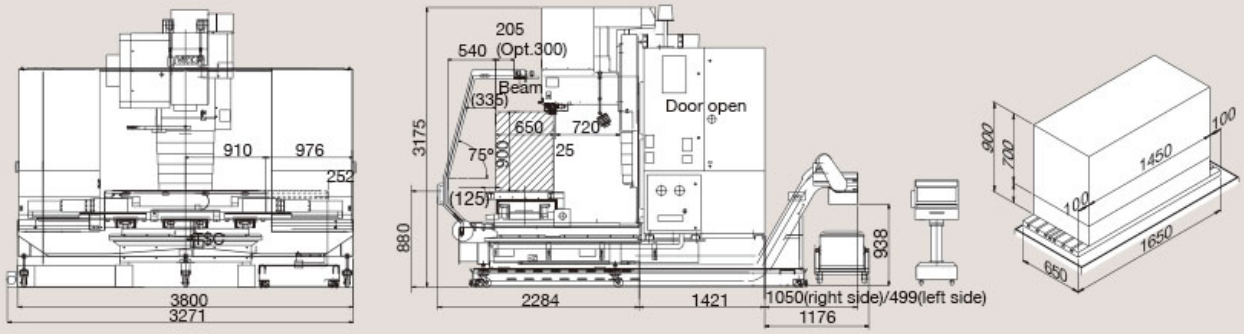

Vcenter-165

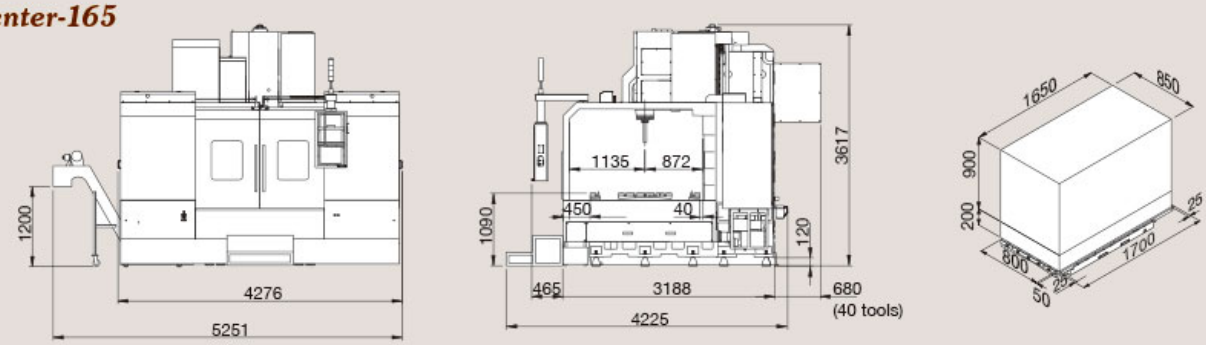

VictorTaichung Taichung, the home of Machine Tool Manufacturing

Quality Meehanite Castings-The backbone of VICTOR TAICHUNG machines.

Being both ISO 9001 approved and a Meehanite cast member, our foundry produces over 1000 tons of castings a month for both our own use and export to Japan.

Modern machining facilities-65% of components manufactured in house.

To ensure greater control over the quality of our machined parts, VICTOR TAICHUNG has introduced 3 giant 5-side machining centers, 1 CIM line for sheet metal manufacturing and 2 complete FMS lines developed in house.

Overseas subsidiaries solely dedicated to service of our own products.

To ensure a market for our products, VICTOR TAICHUNG has invested considerably in setting up a global distribution network. As well as numerous agents around the world, VICTOR TAICHUNG has 9 overseas subsidiaries in USA, England, France, Germany, South Africa, Malaysia, Thailand, Indonesia and China to provide our customers efficient after-sales service and technical supports.

Vcenter-205

Vcenter-P106

Vcenter-AX800

VictorTaichung profile:
Sales turnover: USD 138 mil's (in 2015)*
No. of employees: 873
*Exchange rate: 1 USD=30 TWD.

THE VICTOR-TAICHUNG COMPANIES

TAIWAN
http://www.or.com.tw
E-mail :info@mail.or.com.tw
☐ Victor Taichung Machinery Works Co., Ltd.
Headquarters:
2088, Sec. 4, Taiwan Blvd.,
Taichung, Taiwan, R.O.C.
TEL : 886-4-23592101
FAX : 886-4-23592943
Overseas Marketing Division:
TEL : 886-4-23580701
FAX : 886-4-23584541

UK
☐ Victor CNC (UK) Ltd.
TEL : 44-1-706-648485
FAX : 44-1-706-648483

FRANCE
☐ Victor France
TEL : 33-1-64772000
FAX : 33-1-64772063

GERMANY
☐ Victor GmbH
TEL : 49-2261-478434
FAX : 49-2261-478327

MALAYSIA
☐ Victor Machinery (M) SDN. BHD.
TEL : 60-3-56337180
FAX : 60-3-56337191

THAILAND
☐ Victor (Thailand) Co. Ltd.
TEL : 66-2-9263735
FAX : 66-2-9032373

INDONESIA
☐ PT. Victor Machinery Indonesia
TEL : +62-21-88958504
FAX : +62-21-88958513

USA
☐ Fortune International Inc.
TEL : 1-732-2140700
FAX : 1-732-2140701

SOUTH AFRICA
☐ Victor Fortune (PTY) Ltd.
TEL : 27-11-3923800
FAX : 27-11-3923899

CHINA
☐ Victor Taichung
Machinery (Shanghai)
TEL : 86-21-59768018
FAX : 86-21-59768009

VictorTaichung was also marketed under the brand names VICTOR (outside North America) and FORTUNE VMCGE17EO