VictorTaichung

Management System
ISO 9001:2008
ISO 14001:2004

# Vcenter - A72/A85 A110/A130

## Always Ahead

- Z-axis acceleration 0.75G (excl. Vcenter-A130) minimizes tool changeover time.
- Upgraded rapid feed minimizes non-cutting time:
  - 48/48/48 m/min for Vcenter-A72
  - 42/42/42 m/min for Vcenter-A85/A110
  - 36/36/36 m/min for Vcenter-A130
- Directly-coupled 12000rpm oil-air spindle assures part surface finish.
- Supreme rigid column increases milling & tapping efficiency.
- Extreme long Y-axis travel 780mm for Vcneter-A130

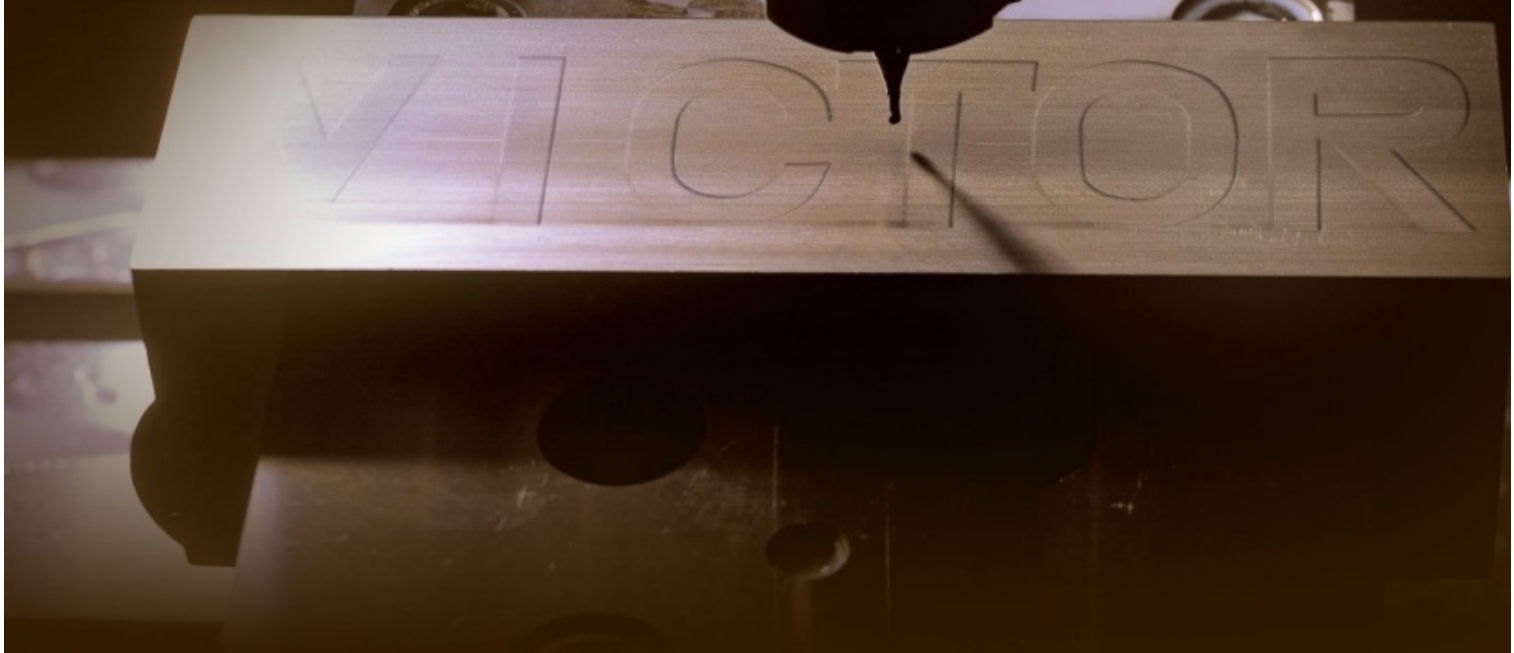


Victor Taichung - an established ISO-9001 & 14001 company

# Advanced Performance

## Z-axis acceleration 0.75G for quick tool change

*With the structure and specification enhancement on Z-axis acceleration 0.75G (0.6G for Vcenter-A130) and increased rapid feed rate, the new A series Vcenters effectively upgrade the cutting efficiency and performance to pay off higher investment costs.*

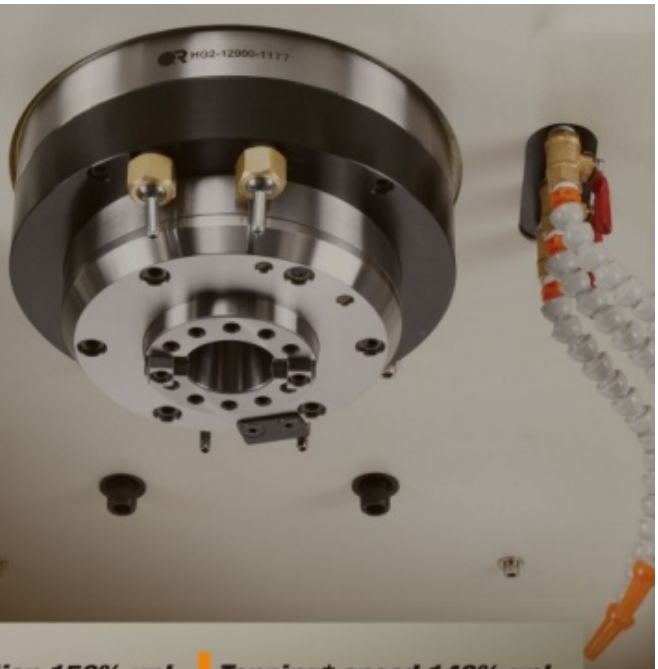

### Z-axis acceleration 150% up!

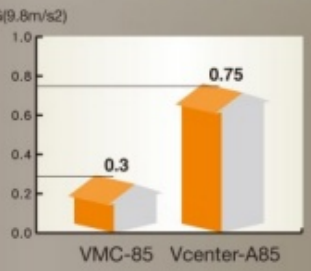


### Tapping* speed 140% up!

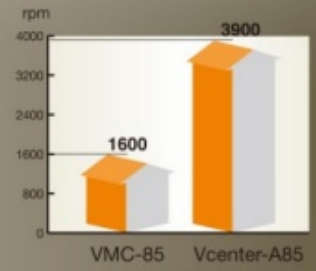


* Tested by tap M6 X P1.0

## Victor's own Spindle

- All spindles are manufactured in-house by Victor Taichung, and each carries its own unique I.D. code to facilitate future servicing requirements.
- Oil/air lubricated design to spread the oil into the spindle bearings by air ensures sufficient lubrication and longer service life than grease lubricated design.
- Unique spindle bearing layout 4+1 with 25° contact angle for 12000rpm spindle ensures high cutting rigidity.
- Optional 2+2 bearing layout with 15° contact angle for 12000/15000rpm spindle facilitates continuous high speed machining.

### 12000 rpm spindle

### Fanuc αi(T)8/12000i (Standard)

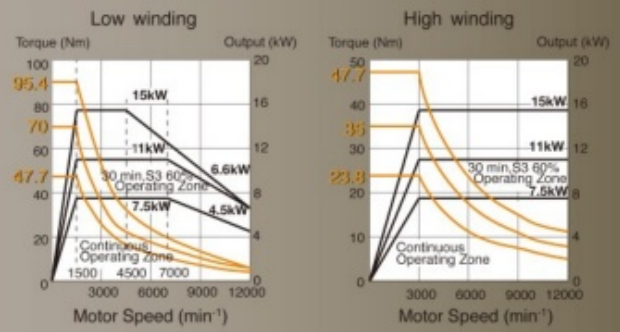


### 15000 rpm spindle

### Fanuc αiL8/15000i (Optional)

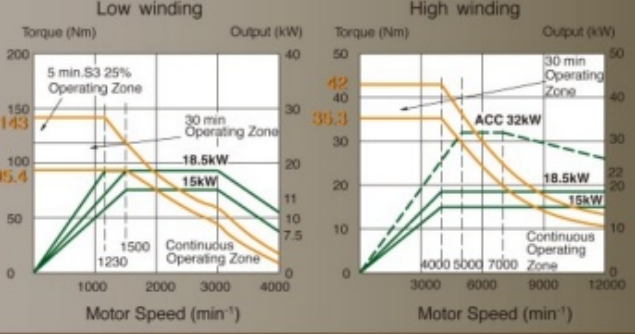

# Performance Tests on Mild Steel S45C *(tested on Vcenter-A85)*

VICTOR-TAICHUNG

## Face mill Ø63 mm (6 blades)

Metal removal rate:

***540 cc/min (by αT8/12000i) (with CTS)***

Spindle speed: 1500 rpm
Feed rate: 6000 mm/min

## Drilling

Capability:

***Ø3.5 mm***

Spindle speed: 6000 rpm
Feed rate: 180 mm/min

***Ø58 mm (with CTS)***

Spindle speed: 1200 rpm
Feed rate: 101 mm/min

## Tapping

Capability:

***M33 x P3.5 (by αL8i)***
***M30 x P3.0 (by αT8i)***

Spindle speed: 100 rpm
Feed rate: 300 mm/min

## Performance Test: Aluminum AL6061

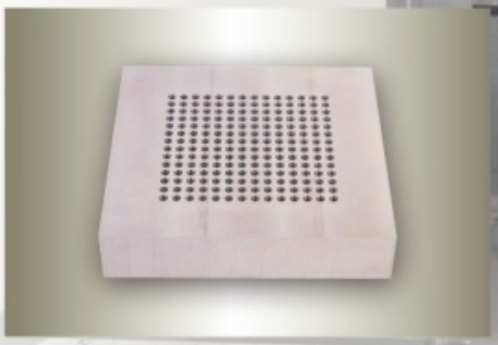

## Mold Steel NAK-80

### Tools

T1 : Face mill
T2 : Drill ø4.2 mm
T3 : M5XP0.8 (196 holes)

### Cycle Time

***27'08" (Vcenter-A85)***
cf. 38'30" (Vcenter-85)

### Effifiency

***42% up!***

### Package for Mold Machining:

| | |
|---|---|
| Tested model: | Vcenter-A110 |
| Tool: | Ball mill D6R3 (finish) |
| Control: | Fanuc 0i-MD + AICC-2 (200 blocks) |
| Rapid feed rate: | 20/20/20 m/min (X/Y/Z) |
| Feed motor power: | 4/4/7 kW (X/Y/Z) |

# Advanced Construction

***Victor Taichung's new A series models have been launched to set up a new standard for C-framed type VMC. Supreme rigid and tough column enables the Z-axis acceleration 0.75G (except Vcenter-A130 with 0.6G), the new A series Vcenter's present high feed rate up to 48 m/min in all axes to minimize spindle non-cutting time and to maximize spindle utilization.***

## Tool change only 5.5 seconds!

- Twin arm type ATC with bi-directional random selection for 24 tool magazine offers quick tool change and optimal reliability.This tool capacity can be optional increased to 32 or 40 tools for more complicated applications.
- Chip-to-chip tool changeover time is just around 5.5 seconds.
- Upgraded SK-40/BT-40 tooling system linked with the stronger tool pull stud (Ø14 mm) enhances the heavy cutting capability and outputs more CTS coolants than conventional BT-40 tooling with Ø10 mm pull studs.

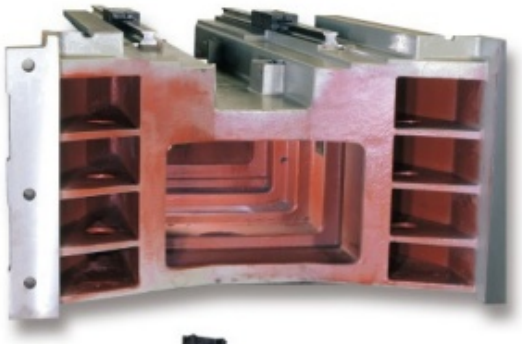

- Vcenter-A85/A110

## Linear Guideways are designed to ensure maximum rigidity and vibration damping characteristics

- Ballscrew holders are directly cast into the machine for even higher rigidity and strength. This ensures a constant support for the ballscrews over the entire machine life.
- The Large diameter ball screws and roller-type linear guides ensure the high maximum structural rigidity during machining.
- Direct coupled servo motors eliminate motor backlash and noise caused by misalignment.

VICTOR-TAICHUNG

## Directly-coupled Spindle (DCS) with high torque spindle motor

- Spindle motor is directly coupled to the spindle avoiding the vibration resulting from belt drives thus enhancing the surface finish on components.
- 12000 rpm spindle speed with high torque output accommodates both heavy cutting at low rpm and high speed machining.
- Oil-air lubrication with filtration system is used for cooling to cool and lubricate the spindle bearings to ensure maximum service life.
- An Air curtain is included to constantly provide the spindle with additional protection to cool and lubricate the spindle bearings to ensure maximum service life.
- Two types of spindle motors meet the power requirement for milling steel and speed requirement for milling Aluminum.

- Vcenter-A72

## High rigidity dynamic structure

- Heavy-duty Meehanite® castings from Victor's licensed foundry are used in the bed and column for maximum damping and strength.
- Supreme rigid and tough column with a heavily ribbed design enables the high Z-axis acceleration for high speed movement.
- CAE (computer aided engineering) design with wide span in Y-axis results in a maximum stiffness to ensure the minimum overhang distortion for whole X-axis traveling range.

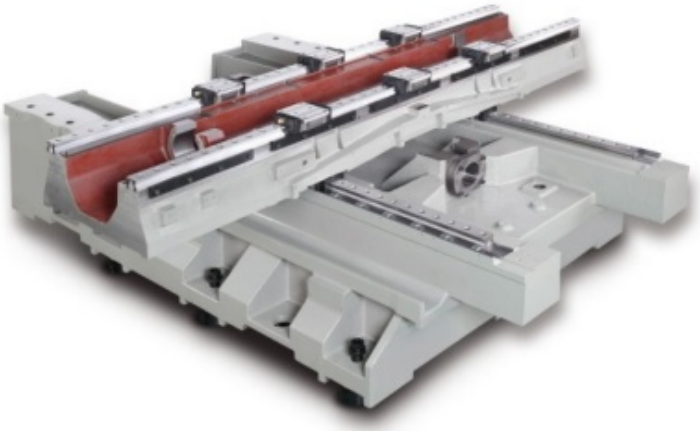

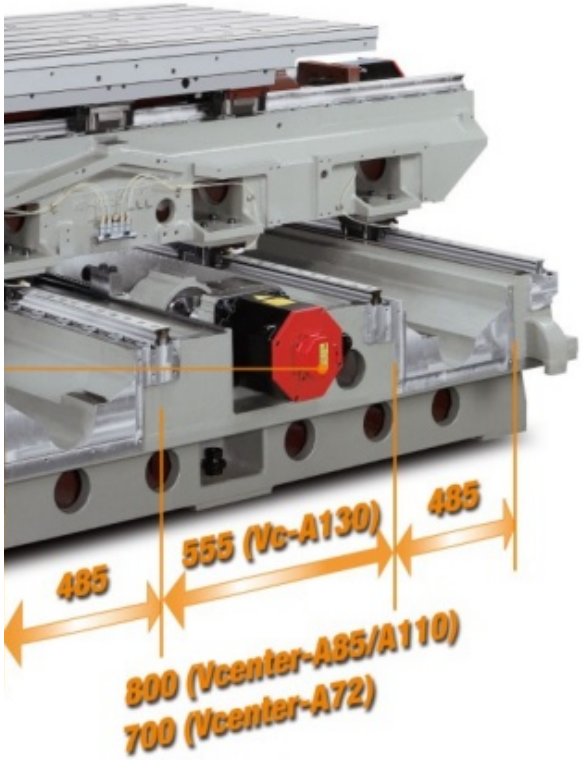


## Chips & Coolant Disposal Upgrade

- Two screw type removers (4 off for Vc-A130) push swarf or chips continuously to the machine front further reduces chip accumulation inside machine.
- High pressure coolants by Grundfos® MTH4-40 (5 bars / 60 Hz) offer strong flow (150 liters/min) to flush the swarf away from the bottom guarding for Vcenter-A85/A110 so as to minimize chip built-up for smooth and continuous machining.
- Large coolant tank minimums heat build-up for higher machining accuracy.
- Dual layer design on the machine base and bottom guarding minimize the coolant leakage to assure a clean and clear working environment.

# Machine Options

## Chip conveyor

Different type of chip conveyors are required for various part materials. Victor's offer chip conveyor takes chip flushed by the high pressure coolants to the machine front and disposes to the left side of machine.

## Coolant through spindle (CTS)

For improved deep hole drilling and boring capability, 'through spindle coolant' is required. Coolant is fed through the centre of the spindle under the high pressure (20 bars / 60 Hz by Grundfos pump MTR3-23) directly to the cutting area. To ensure maximum longevity and reliability, fine particles produced during machining must be filtered out to prevent damaging the spindle; this is ensured by Victor using either a centrifugal dispersion system or by replaceable filter cores.

## Stop blocks for oil hole coolants

As an alternative to CTS, it is possible to supply coolant through the tool holder by using a stop block located on the spindle nose. High pressure coolant can be supplied with no need for higher cost filter system as coolant bypassed the spindle.

## Auto tool length measurement

To reduce tool set-up time, Victor offers two automatic tool length measuring systems:

***Auto tool length measurement***

Metrol® system T-24E is mostly used for tapping and drilling as the probe only measures the tool length.

***Advance tool length measurement***

Renishaw® system TS-27R offers further advancement with the probe capable of measuring both tool lengths and diameters. This system is ideal for batch production where tools need to be constantly changed or replaced.

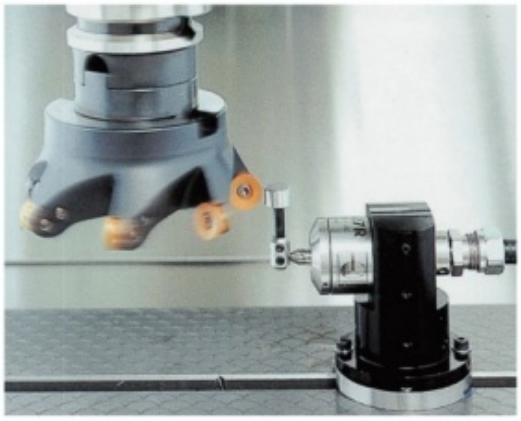

## Coolant options

| Std.-coolant ring<br>Purpose-general | Opt.-directional pipe<br>Purpose-general | Opt.-oil hole coolant<br>Purpose-drilling, boring | Opt.-coolant thru spindle<br>Purpose-drilling, boring | Opt.-oil mist<br>Purpose-tapping, reaming |
|---|---|---|---|---|
| 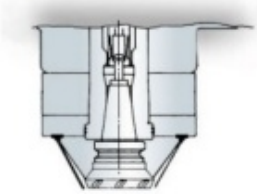 | 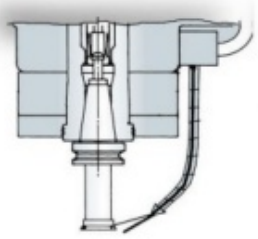 | 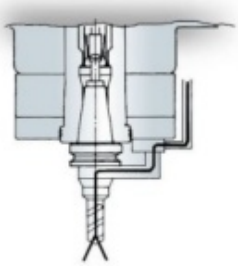 | 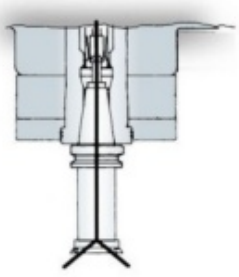 | 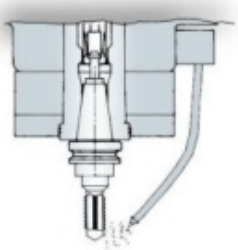 |

## Auto part measuring

To reduce time spent setting workpiece positions and then manually inspecting finished parts, which would be better invested in machining, the automatic part measuring is available with the use of Renishaw® MP10 or OMP-60 measuring probes. With the system provided by Victor, the workpiece position can be identified with the probe and work offsets automatically updated, enabling parts to be made right first time. During batch production in-processing checking can be performed on the machine, while for optimum accuracy in machining part inspection can be done after roughing so that finished part can maintain tight tolerances.

## Fully enclosed guarding with optional CE marked requirement

## Spindle Output (Heidenhain Control)

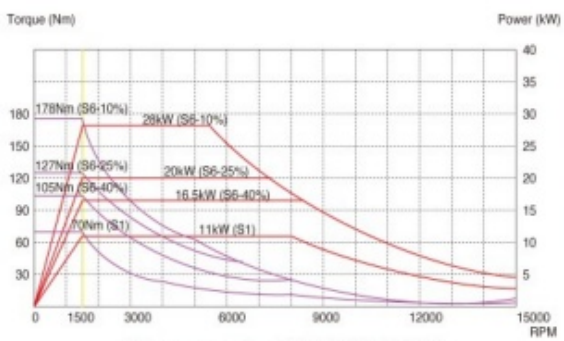


Siemens motor 1PM8131-1CS02

## 4th/5th axis CNC rotary or tilting tables

CNC rotary tables can be easily installed to improve the application range. Four axes simultaneous machining for multiple faces can be realized with a single set-up. The 5th axis tilting table is also available with tilting as well as rotary function. Fanuc 31i-B5 or Heidenhain TNC-620/640/i530 controls will be required will be required for 5 axis simultaneous machining.

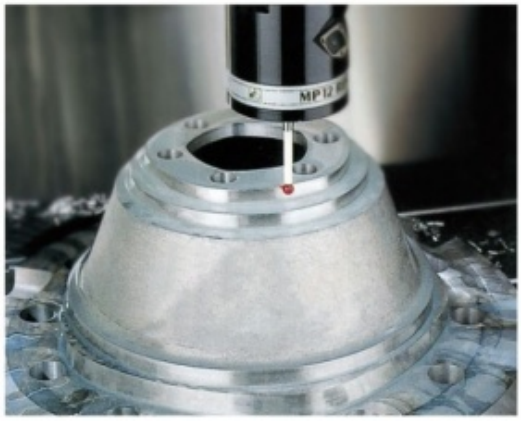

## Linear scales for improved repeatability

Linear scales offer exceptional positioning accuracy up to 0.005 mm over full stroke. Heidenhain® or Fagor® linear scales with a thermal behavior similar to that of the machine are selected to compensate for the thermal expansion and to enhance repeatability. Sealed encoders with durable Aluminum housing offer improved reliability and service life.

## Spindle oil cooler (STD)

Cooling oil circulates around the spindle cartridge constantly to maintain the low temperature during the spindle rotation.

## A/C on electrical cabinet (STD)

Air conditioner is installed on the electrical cabinet to ensure ultimate reliability for control system.

# VICTOR Taichung's NC PACKAGE

## *Fanuc 0i-M/31i-B controls*

With 10.4" color display included as standard, Victor Taichung's Fanuc control package includes conversational function MANUAL GUIDE I to reduce the programming time for easier operation. Through the latest technology for AI contouring control (AICC), Fanuc 0i-M control is capable of addressing look-ahead up to 200 blocks to offer optimal reliability with the highest level of machine integration.
With PLC developed in-house by highly experienced engineers, Vcenter-A72/A85/A110/A130 further include AICC-2 as standard for addressing look ahead 200 blocks for maximizing the machine efficiency to meet the demands for most productions. For higher speed and precision, the control option Data Server board can be installed to extend the memory length for upgrading the data transfer rate. The machine controller can be upgraded to 31i-B control which is capable of addressing 600 blocks as standard and optionally 1000 blocks available by the so-called AICC-2 with HSP function (High Speed Processing) to further reduce the block addressing time for better surface finish.

## *VSS (Victor Software System) Macros*

With exclusive software developed in-house by highly experienced engineers, VSS macros enhance not only machine operation to reduce tool set-up time but also safety features to protect costly spindle. Productivity can be further increased when the adaptive controlled cutting is implemented.

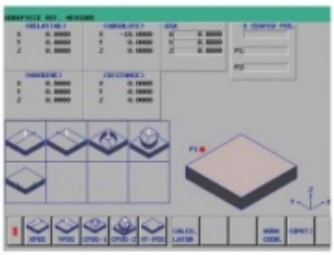

Smart workpiece measurement

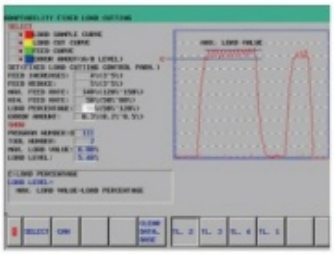

Adaptive cutting at constant loading

Air Bag (abnormal load monitoring)

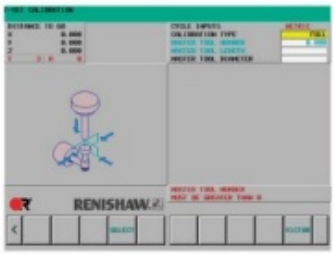


Renishaw® GUI

## *Heidenhain control*

Powerful dialog programming with fully alphanumeric keyboard, Heidenhain control is also available on Vcenter A series machining centers. Without remembering complicated G codes, the sophisticated graphic functions with 15" TFT monitor make programming check easy. Heidenhain TNC-620/i530/640 controls are capable of addressing more than 1000 blocks and further makes use of hard drive memory for advanced 4 or 5 axis simultaneous controls.

## Control features for fast contour milling

| Feature \ Controller | Fanuc | | | Heidenhain | | |
|---|---|---|---|---|---|---|
| | 0i-M | 32i-B | 31i-B | TNC-620 | iTNC-530 | TNC-640 |
| Block addressing time | 2 ms* (with AICC-2) | 2 ms | 0.4 ms | 1.5 ms | 0.5 ms | 0.5 ms |
| Preview contouring (look ahead blocks) | 200* (with AICC-2) (Opt. 400) | 200 | 600 (Opt. 1000 by HSP) | 5000 | 1024 | 5000 |
| Graphic display | 10.4" | 10.4" | 10.4" | 15" | 15" (Opt. 19") | 15" (Opt. 19") |
| Data storage | 1280m (512kB) Opt. 5120m (2MB) | 1280m (512kB) Opt. 5120m (2MB) | 2560m (1MB) Opt. 10240m (8MB) | Min. 2 GB | Min. 2 GB | Min. 2 GB |
| Data server (Memory extension) | Opt. (by CF Card) | Opt. (by CF card) | Std. (with CF card) | N.A. (8 GB with CFR) | Std. 21 GB (by SSRD) Opt. 144 GB (by HRD) | Std. 21 GB (by SSRD) Opt. 144 GB (by HRD) |
| Ethernet link | Std. | Std. | Std. | Std. | Std. | Std. |
| Conversational function | Manual guide i + VSS macros | Manual guide i | Manual guide i | Std. | Std. + smarT.NC | Std. |
| Data transfer interface | PCMCIA + USB | PCMCIA + USB | PCMCIA + USB | USB | USB | USB |

*Victor Taichung's standard

# VICTOR's FANUC 0i-MF (Type-1)/32i-B/31i-B Control SPECIFICATIONS

## Standard

| ITEM | SPECIFICATION | DESCRIPTION |
|---|---|---|
| **Controlled Axes** | | |
| 1. | Controlled Axes | 3 Axes (X, Y, Z) |
| 2. | Simultaneous Controlled Axes | Position / Linear interpolation / Circular interpolation (3 / 3 / 2) |
| 3. | Least Input Increment | 0.001 mm / 0.0001 inch / 0.001 deg. |
| 4. | Least Input Increment 1 / 10 | 0.0001 mm / 0.00001 inch / 0.0001 deg. |
| 5. | Max. command value | ±99999.999mm (±9999.9999in) |
| 6. | Fine Acceleration & Deceleration Control | Std. |
| 7. | High Speed HRV Control | Std. |
| 8. | Inch / Metric Conversion | Std. (G20 / G21) |
| 9. | Interlock | All Axes / Each Axis / Cutting Block Start |
| 10. | Machine Lock | All Axes / Each Axis |
| 11. | Emergency Stop | Std. |
| 12. | Over-travel | Std. |
| 13. | Stored Stroke Check 1 and Check 2 | Std. |
| 14. | Mirror Image | Each Axis |
| 15. | Mirror Image M73, M74, M75, M76 | X, Y Axes |
| 16. | Follow-up | Std. |
| 17. | Position switch (with Victor's own PLC) | Std. |
| **Operation** | | |
| 1. | Automatic Operation | Std. |
| 2. | MDI Operation | MDI B |
| 3. | DNC Operation | Reader / Puncher Interface is Required |
| 4. | DNC Operation with Memory Card | PCMCIA Card Attachment is Required |
| 5. | Program Number Search | Std. |
| 6. | Sequence Number Search | Std. |
| 7. | Sequence Number comparison and stop | Std. |
| 8. | Buffer Register | Std. |
| 9. | Dry Run | Std. |
| 10. | Single Block | Std. |
| 11. | JOG Feed | Std. |
| 12. | Manual Reference Position Return | Std. |
| 13. | Manual Handle Feed | 1 Unit / Each Path |
| 14. | Manual Handle Feed Rate | X1, X10, X100 |
| 15. | Z Axis Neglect | Std. |
| **Interpolation** | | |
| 1. | Positioning | G00 |
| 2. | Single Direction Positioning | G60 |
| 3. | Exact Stop Mode | G61 |
| 4. | Exact Stop | G09 |
| 5. | Linear Interpolation | G01 |
| 6. | Circular Interpolation | G02, G03 (multi-quadrant is possible) |
| 7. | Dwell | G04 |
| 8. | Helical Interpolation | Std. |
| 9. | Skip Function | G31 |
| 10. | Reference Position Return | G28 |
| 11. | Reference Position Return Check | G27 |
| 12. | 2nd / 3rd / 4th Reference Position Return | Std. |
| **Feed** | | |
| 1. | Rapid Traverse Rate | Std. |
| 2. | Rapid Traverse Override | F0, 25%, 50%, 100% |
| 3. | Feed Per Minute | G94 (mm / min) |
| 4. | Tangential Speed Constant Control | Std. |
| 5. | Cutting Feed rate Clamp | Std. |
| 6. | Automatic Acceleration / Deceleration | Rapid traverse: linear; Cutting feed: exponential |
| 7. | Rapid traverse Bell-shaped Acc. / Deceleration | Std. (G00) |
| 8. | Bell-shaped Acc. / Deceleration Before & After Cutting Feed Interpolation | Std. (G01) |
| 9. | Automatic Corner Deceleration | Std. (G64) |
| 10. | Linear Acc / Deceleration Before & After Cutting Feed Interpolation | Std. (G01) |
| 11. | Feed rate Override | 0 ~ 150% |
| 12. | Jog Override | 0 ~ 100% |
| 13. | Automatic Corner Override | G62 |
| 14. | Feed Stop | Std. |
| 15. | AI contour control (AICC, G05.1) (in total) | 200 blocks (0/32i with AICC-2) |
| 16. | AICC-2 + High speed processing (G05.1) (in total) | 600 blocks (31i) |
| 17. | Jerk Control | Std. (16i/31i) |
| 18. | Rigid Tapping Bell-Shaped Acc./Deceleration | Std. |
| 19. | Feed rate clamp by arc radius (G02/G03) | Std. |
| **Program Input** | | |
| 1. | EIA / ISO Automatic Recognition | Std. |
| 2. | Label Skip | Std. |
| 3. | Parity Check | Std. |
| 4. | Control In / Out | Std. |
| 5. | Optional Block Skip | 1 |
| 6 | Max. Programmable Dimension | ±8-Digit |
| 7. | Program Number | O4-Digit |
| 8. | Sequence Number | N5-Digit |
| 9. | Absolute / Incremental Programming | G90 / G91 |
| 10. | (Pocket Calculator Type) Decimal Point Programming | Std. |
| 11. | Input Unit 10 Time Multiply | Std. |
| 12. | Plane Selection | G17, G18, G19 |
| 13. | Rotary Axis Designation | Std. |
| 14. | Rotary Axis Roll-Over Function | Std. |
| 15. | Polar coordinate Command | G16 |
| 16. | Coordinate System Setting | Std. |
| 17. | Automatic Coordinate System Setting | Std. |
| 18. | Work piece Coordinate System | G52, G53, G54 ~ G59 |
| 19. | Addition of Workpiece Coordinate System Pair | 48 Pairs |
| 20. | Manual Absolute On And Off | Std. |
| 21. | Optional Chamfering / Corner R | Std. |
| 22. | Programmable Data Input | G10 |
| 23. | Sub Program Call | 4 (0/32i) or 10 (31i) folds nested |
| 24. | Custom macro B | Std. |
| 25. | Addition of Custom Macro Common Variables | #100~#199, #500~#999 |
| 26. | Canned Cycles For Milling | G73 / G74 / G76, G80-G89, G98 / G99 |
| 27. | Small hole peck drilling cycle | G83 |
| 28. | Circular Interpolation by R Programming | Std. |
| 29. | Program Format | FANUC std. format |
| 30. | Program Stop / Program End | M00 / M01 / M02 / M30 |
| 31. | Reset | Std. |
| 32. | Scaling | G51 |
| 33. | Coordinate System Rotation | G68 |
| **Auxiliary Spindle Speed Function** | | |
| 1. | Auxiliary Function Lock | Std. |
| 2. | High Speed M / S / T Interface | Std. |
| 3. | Spindle Speed Function | Std. |
| 4. | Spindle Override | 50 ~ 120% |
| 5. | 1st Spindle Orientation | Std. |
| 6. | M Code Function | M3 digit |
| 7. | S Code Function | S5 digit |
| 8. | T Code Function | T2 digit |
| 9. | Rigid tapping | Std. |
| **Tool Function & Tool Compensation** | | |
| 1. | Tool Function | T8 digit |
| 2. | Tool Offset Pairs | ±5-digit, 400 (0/32i), 999 (31i) |
| 3. | Tool Offset Memory C | Std. (D/H codes are separated) |
| 4. | Tool Length Compensation | G43-G44, G45-G48, G49 |
| 5. | Cutting Compensation C | Std. |
| **Accuracy Compensation** | | |
| 1. | Backlash Compensation | Rapid Traverse / Cutting Feed |
| 2. | Stored Pitch Error Compensation | Std. |
| **Edit Operation** | | |
| 1. | Part Program Storage Length (in total) | 1280m (512KB) (0/32i), 2560m (31i) |
| 2. | Number of Registerable programs (in total) | 400 (0/32i),1000 (16i/31i) |
| 3. | Part Program Editing / Protect | Std. |
| 4. | Background Editing | Std. |
| 5. | Memory card editing | Std. (0i-F) |
| **Setting and Display** | | |
| 1. | Status Display | Std. |
| 2. | Clock Function | Std. |
| 3. | Current Position Display | Std. |
| 4. | Program Display | Program name 31 characters |
| 5. | Parameter Setting and Display | Std. |
| 6. | Self Diagnosis Function | Std. |
| 7. | Alarm Display | Std. |
| 8. | Alarm History Display | 25 |
| 9. | Operation History Display | Std. |
| 10. | Help Function | Std. |
| 11. | Run Hour and Parts Count Display | Std. |
| 12. | Actual Cutting Feedrate Display | Std. |
| 13. | Display of Spindle Speed and T Code At All Screens | Std. |
| 14. | Graphic Function | Std. |
| 15. | Dynamic graphic display | Std. |
| 16. | Servo Setting Screen | Std. |
| 17. | Spindle Setting Screen | Std. |
| 18. | Display of Hardware and Software Configuration | Std. |
| 19. | Multi-Language Display | Std. |
| 20. | Data Protection Key | Std. |
| 21. | Erase CRT Screen Display | Std. |
| 22. | Machining Condition Selecting Screen | Std. |
| 23. | Color LCD / MDI | 10.4" (0/32i/31i) |
| **Data Input / Output** | | |
| 1. | Reader / Puncher Interface | RS-232 interface |
| 2. | External Work piece number search | 9999 |
| 3. | Memory Card Interface | Std. |
| 4. | Embedded Ethernet (10Mbps) | Std. |
| 5. | USB Device | Std. |

## OPTIONS

| ITEM | SPECIFICATION | DESCRIPTION | | |
|---|---|---|---|---|
| **With hardware included** | | **0i-M** | **32i-B** | **31i-B** |
| 1. | Conversational programming (Manual Guide i) | Std. | Std. | Std. |
| 2 | Conversational programming (Super Cap i) | N.A. | N.A. | N.A. |
| 3. | Data server (with PCB and CF card 1GB) | □ | □ | Std. |
| 4. | Fast Ethernet (100Mbps, available in Data server) | □ | Std. | Std. |
| 5. | Tool life management (2 buttons on control panel) | □ | □ | □ |
| 6. | Part Program Storage Length 512m (2MB in total) | □ | □ | □ |
| 7. | Part Program Storage Length 8MB in total | N.A. | N.A. | □ |
| 8. | Program restart | □ | □ | □ |
| 9. | Optional block skip 9 blocks | □ | □ | □ |
| 10. | High Precision Contour Control (HPnanoCC, with RISC board)*1 | N.A. | N.A. | Std. |
| 11. | Profibus | □ | □ | □ |
| 12. | 5-axis simultaneous control | N.A. | N.A. | □ (31i-B5) |
| **Without hardware included** | | | | |
| 13. | AI contour control II (AICC-2, G05.1, 200 blocks) *1 | Std. | Std. | Std. |
| 14. | Look ahead block expansion (1000 blocks in total) *1 | N.A. | N.A. | □ |
| 15. | Tool load monitoring (with Victor own PLC) | □ | □ | □ |
| 16. | Programmable mirror image (G50.1) | □ | □ | □ |
| 17. | Bi-directional Pitch Error Compensation | □ | □ | □ |
| 18. | Addition of tool pairs for tool life management 512 sets | N.A. | □ | □ |
| 19. | Cylindrical interpolation (G7.1) (used on 4th-axis) | Std. | □ | □ |
| 20. | Interruption type custom macro | N.A. | □ | □ |
| 21. | Addition of work-piece coordinate systems 300 sets | N.A. | N.A. | □ |
| 22. | Exponential interpolation (G2.3) | N.A. | N.A. | □ |
| 23. | Smooth interpolation | N.A. | N.A. | □ |
| 24. | Spiral/conical interpolation | N.A. | N.A. | □ |
| 25. | Polar coordinate interpolation | N.A. | □ | □ |
| 26. | Floating reference position return | N.A. | N.A. | □ |
| 27. | Hypothetical axis interpolation (G07) | N.A. | N.A. | □ |
| 28. | Tool retract and return (G10.6 with Victor own PLC) | N.A. | N.A. | □ |
| 29. | Tilted Work Plane command (TWP, G68.2) | □ | □ | □ |

*1. Block addressing time:
- 2 ms for AICC-2 (0i-F/0i-B)
- 1ms for HPCC (max. cutting feed 60 m/min) (31i-B)
- 0.4ms for AI HPCC and AI nano HPCC (150m/min) (31i-B) and AICC-2+ High speed processing (31i-B)

# Machine Specification

| Item | Units | Vcenter-A72 | Vcenter-A85 | Vcenter-A110 | Vcenter-A130 |
|---|---|---|---|---|---|
| **Travel** | | | | | |
| X axis travel | mm | 720 | 850 | 1100 | 1300 |
| Y axis travel | mm | 480 | 600 | 600 | 780 |
| Z axis travel | mm | 660 | 560 | 560 | 700 |
| **Distance** | | | | | |
| Spindle center to column | mm | 539.5 | 660 | 660 | 770 |
| Spindle nose to table surface | mm | 150 ~ 810 | 150 ~ 710 | 150 ~ 710 | 100 ~ 800 |
| **Table** | | | | | |
| Table work area | mm | 800 x 460 | 1100 x 600 | 1350 x 600 | 1400 x 700 |
| Dimension of T-slot | mm | 4 x 18 x 100 | 6 x 18 x 100 | 6 x 18 x 100 | 7 x 18 x 100 |
| Max. table load | kg | 500 | 1000 | 1200 | 1500 |
| **Spindle** | | | | | |
| Spindle taper | | BT-40 (opt. BBT-40) | BT-40 (opt. BBT-40) | BT-40 (opt. BBT-40) | BT-40 (opt. BBT-40) |
| Spindle motor-cont/30min/5min | kW | 7.5/11/15 opt. 15/18.5/- | 7.5/11/15 opt. 15/18.5/- | 7.5/11/15 opt. 15/18.5/- | 7.5/11/15 opt. 15/18.5/- |
| Spindle speed | rpm | 12000 (opt. 15000) | 12000 (opt. 15000) | 12000 (opt. 15000) | 12000 (opt. 15000) |
| **Feed rate** | | | | | |
| Rapid feed rate-X/Y/Z | m/min | 48/48/48 | 42/42/42 | 42/42/42 | 36/36/36 |
| Axis acceleration-X/Y/Z | m/sec² | 0.5G/0.5G/0.75G | 0.5G/0.5G/0.75G | 0.5G/0.5G/0.75G | 0.5G/0.5G/0.6G |
| Axis feed motor-X/Y/Z | kW | 4.5/4.5/5.5 | 4.5/4.5/5.5 | 4.5/4.5/5.5 | 4.5/4.5/5.5 |
| Cutting feedrate by table | m/min | 20 | 20 | 20 | 20 |
| X/Y/Z ballscrew | mm | 40 x P12 | 45 x P16 | 45 x P16 | 45 x P12 |
| Linear guide width (X/Y/Z) | mm | 30/35/35 | 45/45/45 | 45/45/45 | 45/35/55 |
| **Tools** | | | | | |
| Max. tool length | mm | 300 | 300 | 300 | 300 |
| Max. tool weight | kg | 7 | 7 | 7 | 7 |
| Magazine capacity | | 24 (opt. 32) | 24 (opt. 32) | 24 (opt. 32) | 24 (opt. 40) |
| Max. tool diameter (without adjacent tools) | mm | 76 (125) | 80 (125) | 80 (125) | 76 (125) |
| Tool exchange time | sec. | 2.1 (T-T), 3.8 (C-C) | 2.1 (T-T), 5.5 (C-C) | 2.1 (T-T), 5.5 (C-C) | 2.1 (T-T), 5.5 (C-C) |
| Pull stud angle | deg. | 15 (JIS 40P) | 15 (JIS 40P) | 15 (JIS 40P) | 15 (JIS 40P) |
| Tool selection method | | Random | Random | Random | Random |
| **Machine** | | | | | |
| Power requirement | kVA | 40 (excl. CTS) | 40 (excl. CTS) | 40 (excl. CTS) | 40 (excl. CTS) |
| Min/Max. air pressure | kg/cm² | 5.5 ~ 6.5 | 5.5 ~ 6.5 | 5.5 ~ 6.5 | 5.5 ~ 6.5 |
| Coolant tank capacity | L. | 400 | 510 | 550 | 650 |
| Std. NC controller (Fanuc) | | 0i-MF (10.4") | 0i-MF (10.4") | 0i-MF (10.4") | 0i-MF (10.4") |
| Floor space requirement (with conveyor) | mm | 3119 x 2676 | 3840 x 3577 | 4180 x 3577 | 4381 x 4303 |
| Max. machine height | mm | 3190 | 3007 | 3007 | 3158 |
| Machine weight | kg | 5150 | 7070 | 7400 | 11000 |

## Standard accessories:

- Fully enclosed splash guard
- **Fanuc 0i-M (10.4") control**
- Spindle oil cooler
- Air conditioner for electric cabinet
- Two screw-type chip removers (4 off for Vcenter-A130)
- Rigid tapping
- Remote MPG
- Hand tools and toolbox
- T nuts for table slot
- 3-step warning light
- Auto power off system
- Leveling blocks
- **Oil skimmer**
- Air gun
- Coolant gun
- Fanuc e-book (CD)

## Optional accessories:

- Air dryer
- Chip conveyor with cart
- High-powered spindle motor
- 15000 rpm spindle (DCS)
- Coolant through spindle (CTS)
- 32 or 40 tool magazine
- Linear scales
- Auto tool length measurement
- Stop block for special tools
- $4^{th}/5^{th}$ axis interface
- Rotary tables
- Auto part measuring
- Auto door
- BBT-40 (Bigplus BT-40) tooling
- Package for mold machining (with smaller pitch ballscrews)
- Manuals for Fanuc controller

# Machine Layout

## *Vcenter-A72*

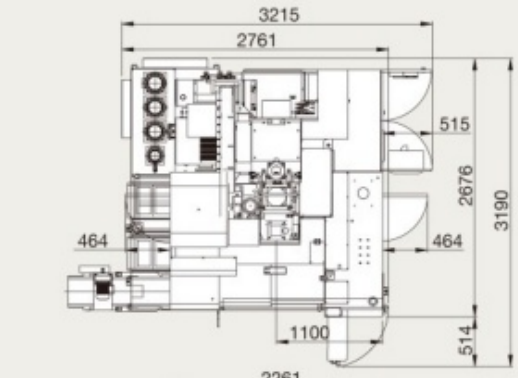


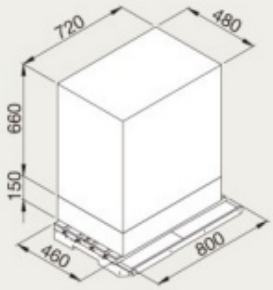


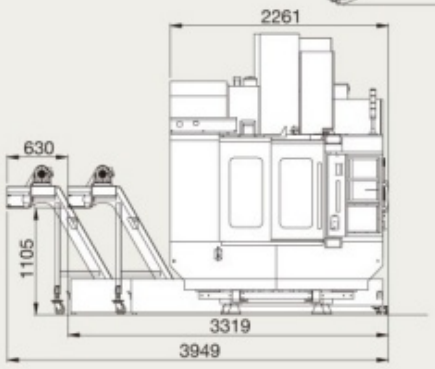


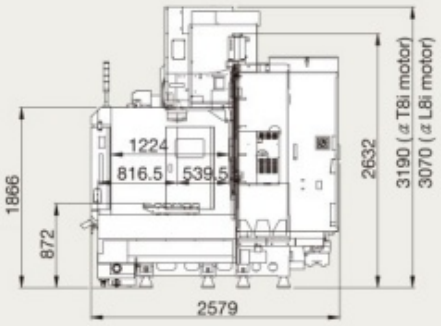


Unit:mm

## *Vcenter-A85 (Vcenter-A110)*

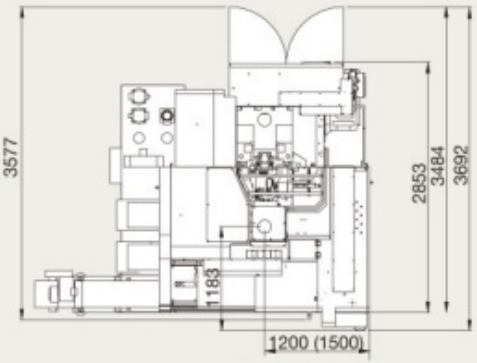


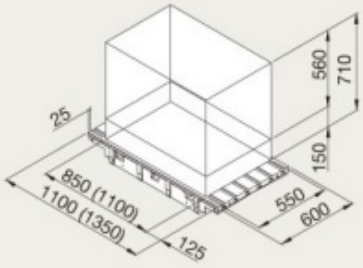


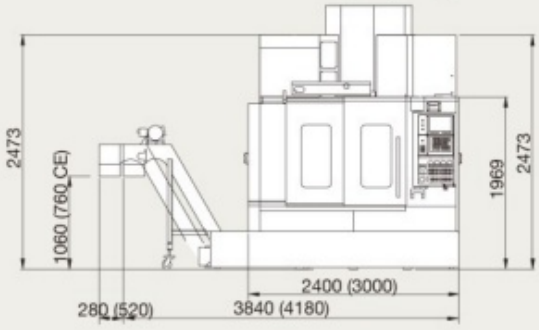


The servo motor of Z-axis should separated before delivered.

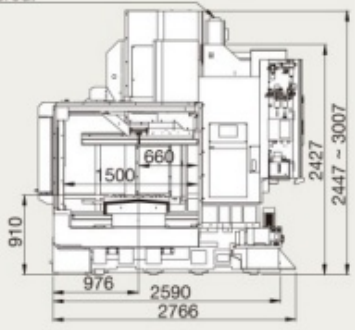


Unit:mm

## Vcenter-A130

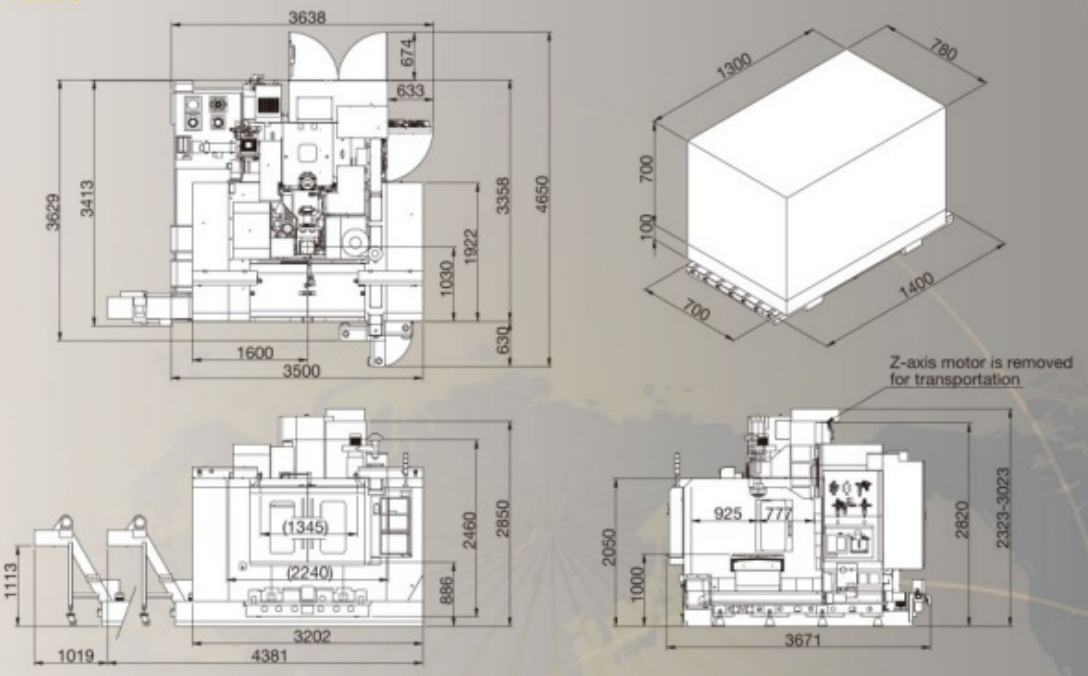


# Tool Shank

### BT 40

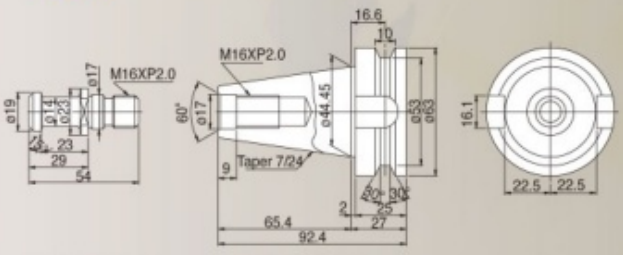


JIS B6339 40P MAS-P40T

### SK 40

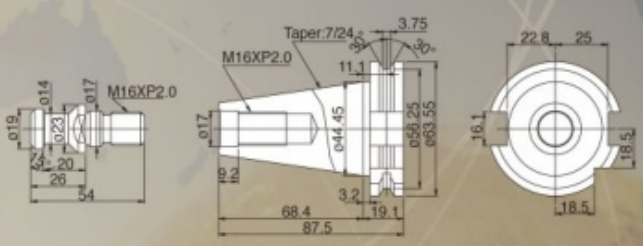


DIN69872A DIN69871A-SK40

**VictorTaichung profile:**
Sales turnover: USD 138 mil's (in 2015)*
No. of employees: 831
*Exchange rate: 1 USD=30 TWD.

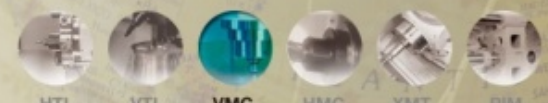


THE VICTOR-TAICHUNG COMPANIES


**TAIWAN**
http://www.or.com.tw
E-mail :info@mail.or.com.tw
□ Victor Taichung Machinery Works Co., Ltd.
**Headquarters:**
2088, Sec. 4, Taiwan Blvd.,
Taichung, Taiwan, R.O.C.
TEL : 886-4-23592101
FAX : 886-4-23592943
**Overseas Marketing Division:**
TEL : 886-4-23580701
FAX : 886-4-23584541

**UK**
□ Victor CNC (UK) Ltd.
TEL : 44-1-706-648485
FAX : 44-1-706-648483

**FRANCE**
□ Victor France
TEL : 33-1-64772000
FAX : 33-1-64772063

**GERMANY**
□ Victor GmbH
TEL : 49-2261-478434
FAX : 49-2261-478327

**MALAYSIA**
□ Victor Machinery (M) SDN. BHD.
TEL : 60-3-56337180
FAX : 60-3-56337191

**THAILAND**
□ Victor (Thailand) Co. Ltd.
TEL : 66-2-9263735
FAX : 66-2-9032373

**INDONESIA**
□ PT. Victor Machinery Indonesia
TEL : +62-21-88958504
FAX : +62-21-88958513

**USA**
□ Fortune International Inc.
TEL : 1-732-2140700
FAX : 1-732-2140701

**SOUTH AFRICA**
□ Victor Fortune (PTY) Ltd.
TEL : 27-11-3923800
FAX : 27-11-3923899

**CHINA**
□ Victor Taichung
Machinery (Shanghai)
TEL : 86-21-59768018
FAX : 86-21-59768009